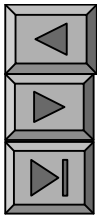

☝

✌

👌 Bode

11−1

$$H(\mathrm{j}\ ) \quad \frac{\dot{R}_k(\mathrm{j}\ )}{\dot{E}_{sj}(\mathrm{j}\ )}$$

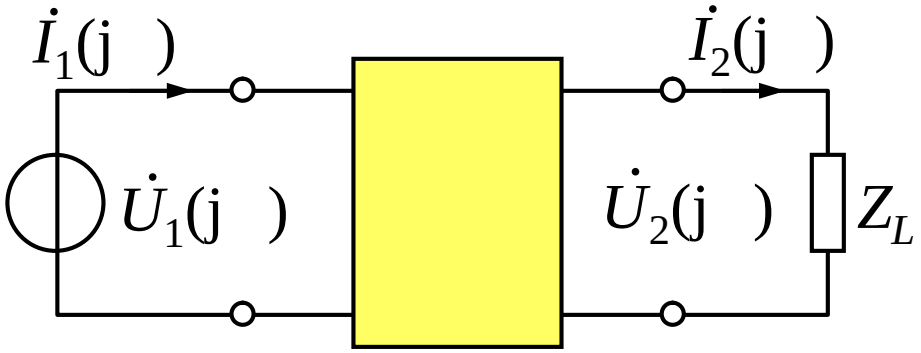

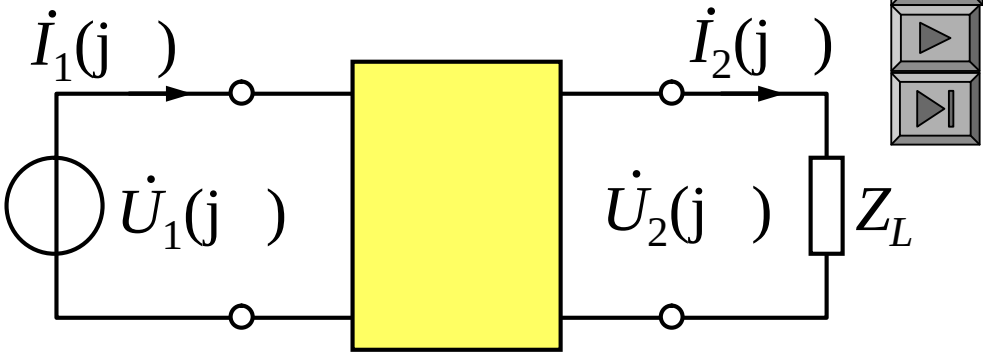

$$H(\mathrm{j}\ ) \quad \frac{\dot{U}_2(\mathrm{j}\ )}{\dot{U}_1(\mathrm{j}\ )}$$

$$H(\mathrm{j}\ ) \quad \frac{\dot{U}_2(\mathrm{j}\ )}{\dot{I}_1(\mathrm{j}\ )}$$

$$H(\mathrm{j}\ ) \quad \frac{\dot{I}_2(\mathrm{j}\ )}{\dot{U}_1(\mathrm{j}\ )}$$

$$H(\mathrm{j}\ ) \quad \frac{\dot{I}_2(\mathrm{j}\ )}{\dot{I}_1(\mathrm{j}\ )}$$

$$H(\mathrm{j}\ ) \quad \frac{\dot{U}_1(\mathrm{j}\ )}{\dot{I}_1(\mathrm{j}\ )}$$

$$H(\mathrm{j}\ ) \quad \frac{\dot{I}_1(\mathrm{j}\ )}{\dot{U}_1(\mathrm{j}\ )}$$

11−1 *RLC*

☞ *RLC* *u*

i *C* *L*

f

( )

1.

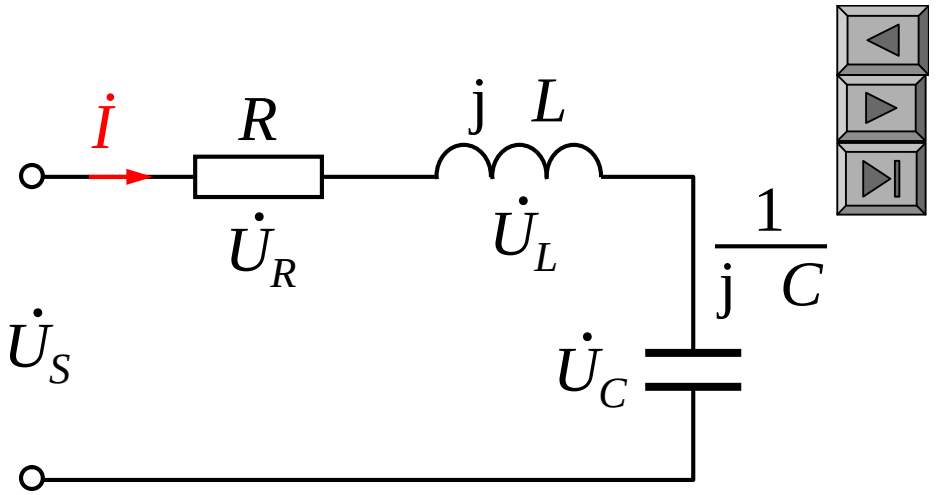

$$Z \quad R \quad \text{j}(X_L \quad X_C)$$

$$X_L \quad X_C \quad 0$$

$$Z \quad R$$

$$L \quad \frac{1}{C}$$

$$\frac{1}{\sqrt{LC}}$$

$$f \quad \frac{1}{2 \quad \sqrt{LC}}$$

RLC

$L \quad C \qquad\qquad R$

(1) L C f L C

(2) f L C (C)

2.

(1)

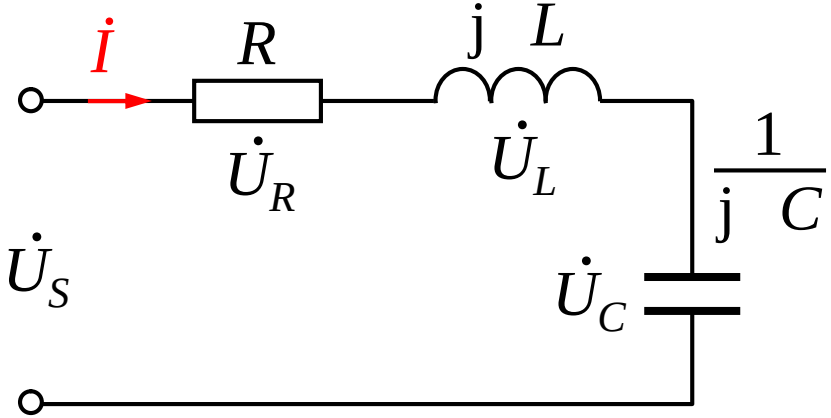

(2) $Z(\mathrm{j}\quad)$ R

$|I(\mathrm{j}\quad)|$ $\dfrac{|U_S(\mathrm{j}\quad)|}{R}$

$|Z(j\quad)|$

$Z(j\quad)\quad R+j\qquad L$

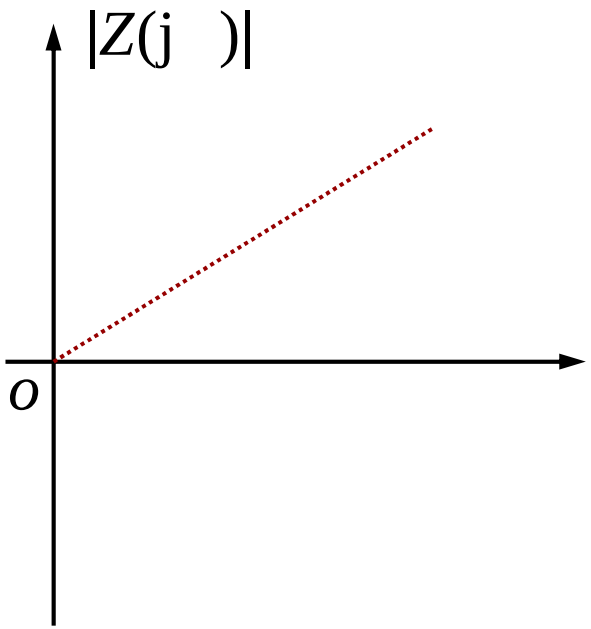

(3)

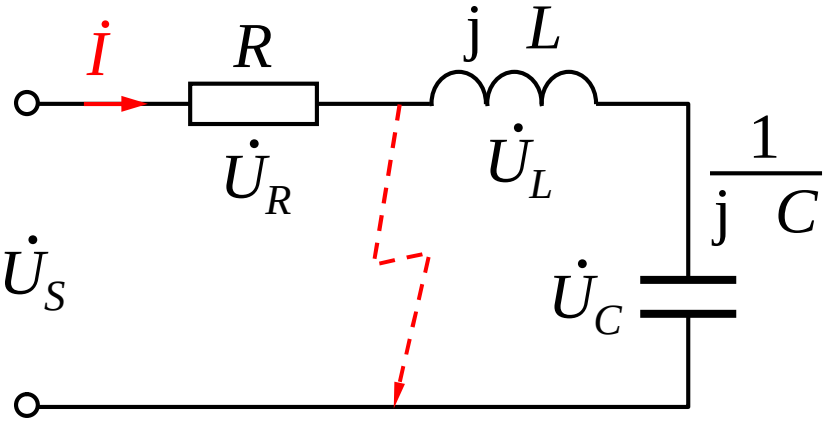

$U_X(\mathrm{j}\ \ _0)$ 0 $U_L(\mathrm{j}\ \ _0)$ $\dot{U}_S$

$U_C(\mathrm{j}\ \ _0)$

$U_L(\mathrm{j}\ \ _0)$ $_0LI(\mathrm{j}\ \ _0)$ $_0L\dfrac{U_S}{R}$ QU_S

$U_C(\mathrm{j}\ \ _0)$ $\dfrac{1}{_0C}I(\mathrm{j}\ \ _0)$ $\dfrac{1}{_0C}\dfrac{U_S}{R}$ QU_S

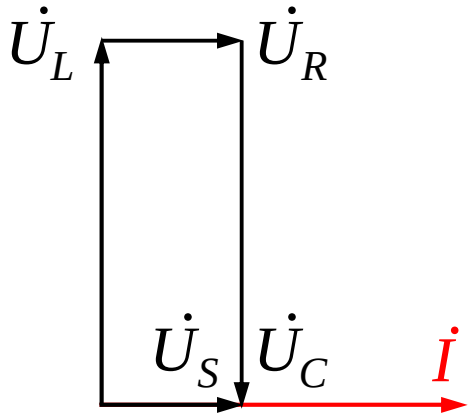

Q $\dfrac{_0L}{R}$ $\dfrac{1}{_0CR}$ $\dfrac{1}{R}\sqrt{\dfrac{L}{C}}$

$\dfrac{U_L(\mathrm{j}\ \ _0)}{U_S}$ $\dfrac{U_C(\mathrm{j}\ \ _0)}{U_S}$

$_0L$ $\dfrac{1}{_0C}$ R Q

$U_L(\mathrm{j}\ \ _0)$ $U_C(\mathrm{j}\ \ _0)$ U_S

$L \quad C$

$L \quad C$

L 0.3mH R 10

560kHz

C

1.5 V

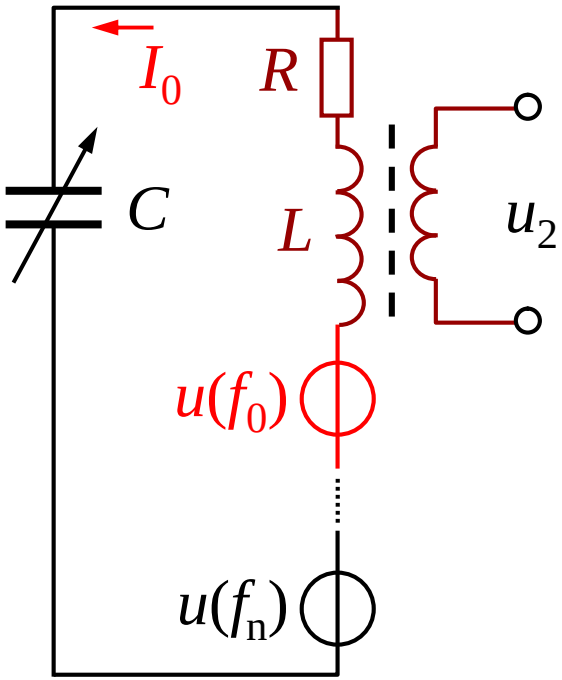

$$C \quad \frac{1}{(2 \quad f_0)^2 L} \quad 269\text{pF}$$

Q

L

$$I_0 \quad \frac{U}{R} \quad \frac{1.5}{10} \qquad \text{A}$$

$$U_C \quad I_0 \frac{1}{{}_0 C} \qquad \text{V} \quad 1.5 \text{ V}$$

Q 106

(4)

$$P(\mathrm{j}\ \ _0)\quad U_S I(\mathrm{j}\ \ _0)\quad I^2(\mathrm{j}\ \ _0)R$$

$$Q(\mathrm{j}\ \ _0)\quad Q_L(\mathrm{j}\ \ _0)\quad Q_C(\mathrm{j}\ \ _0)$$

$$_0LI^2(\mathrm{j}\ \ _0)\quad \frac{}{_0C}I^2(\mathrm{j}\ \ _0)$$

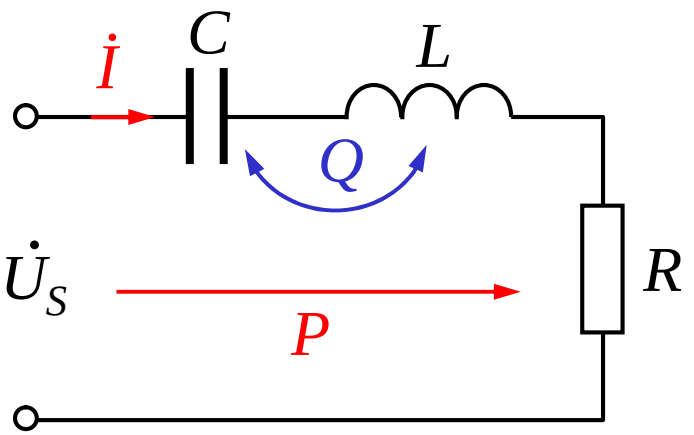

(5)

$i \quad I_{\mathrm{m}}\cos \quad t$

$u_C \quad U_{C\mathrm{m}}\sin \quad t \quad I_{\mathrm{m}} \quad {}_0L\sin \quad t$

w_L j $\quad \frac{1}{2}Li^2 \quad LI^2\cos^2 \quad t$

w_C j $\quad \frac{1}{2}Cu_C^2 \quad LI^2\sin^2 \quad t$

W j $\quad W_L$ j $\quad W_C$ j

LI^2 j $\quad CU_C{}^2$ j $\quad CQ^2U_S{}^2$

Q $\frac{{}_0 L}{R}$ ${}_0 \frac{L\, I^2(\mathrm{j}\ {}_0)}{R\, I^2(\mathrm{j}\ {}_0)}$ $\frac{|Q_L(\mathrm{j}\ {}_0)|}{P(\mathrm{j}\ {}_0)}$ $\frac{|Q_C(\mathrm{j}\ {}_0)|}{P(\mathrm{j}\ {}_0)}$

$$\frac{L\, I^2(\mathrm{j}\ {}_0) \longrightarrow}{T_0 R\, I^2(\mathrm{j}\ {}_0) \longrightarrow}$$

Q

Q

“ ”

Q

11−3 *RLC*

☞ u_S R

L C

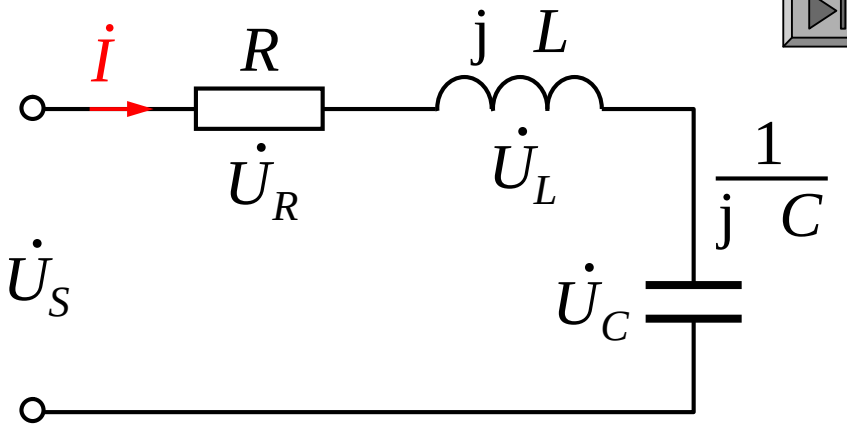

☞

——

0

1.

$$H_R(\mathrm{j}\ ) \quad \frac{\dot{U}_R(\mathrm{j}\ )}{\dot{U}_S(\mathrm{j}\ )} \quad \frac{R}{Z(\mathrm{j}\ )}$$

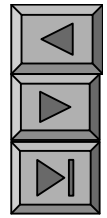

0

0

0 1 2

0

0

Q

0

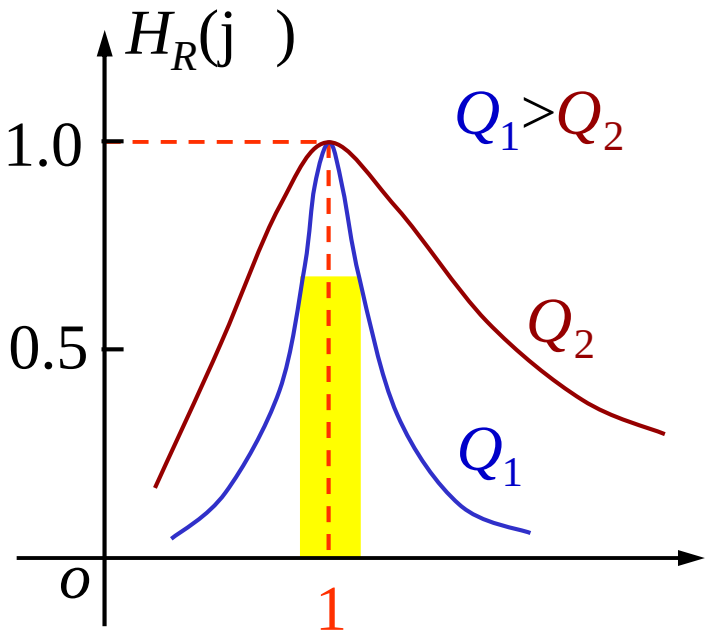

( )

0.707

j2

j1

j2 j1)

$$\frac{1}{\sqrt{1 \quad Q^2 \quad \frac{1}{}\,)^2}} \quad \frac{1}{\sqrt{2}}$$

$$Q^2 \quad \frac{1}{}\,)^2 \quad 1$$

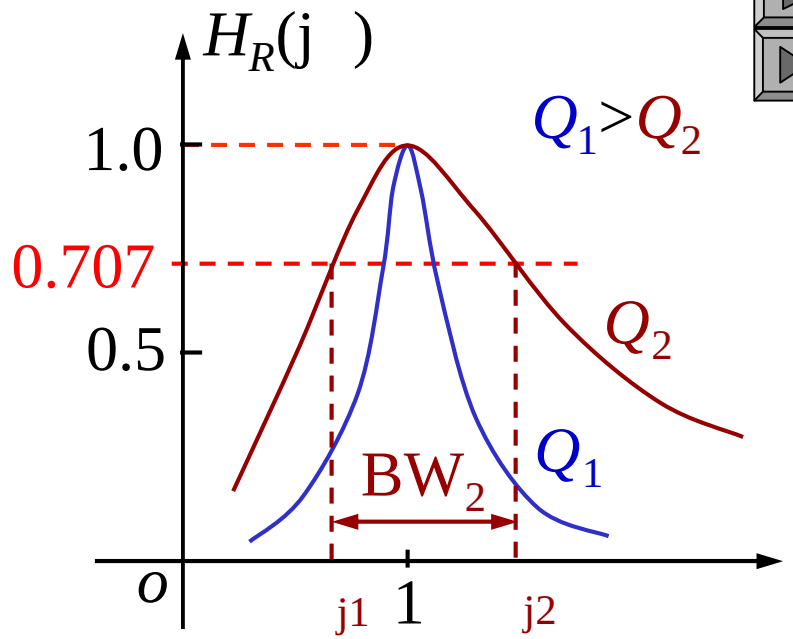

$$Q \quad \frac{1}{}\,) \quad 1$$

$$BW \quad \text{j2} \quad \text{j1} \quad \frac{1}{Q}$$

$$BW \quad \text{j2} \quad \text{j1} \quad \frac{0}{Q}$$

BW j2 j1 $\frac{0}{Q}$ Q BW

☞

Q

☞

Q

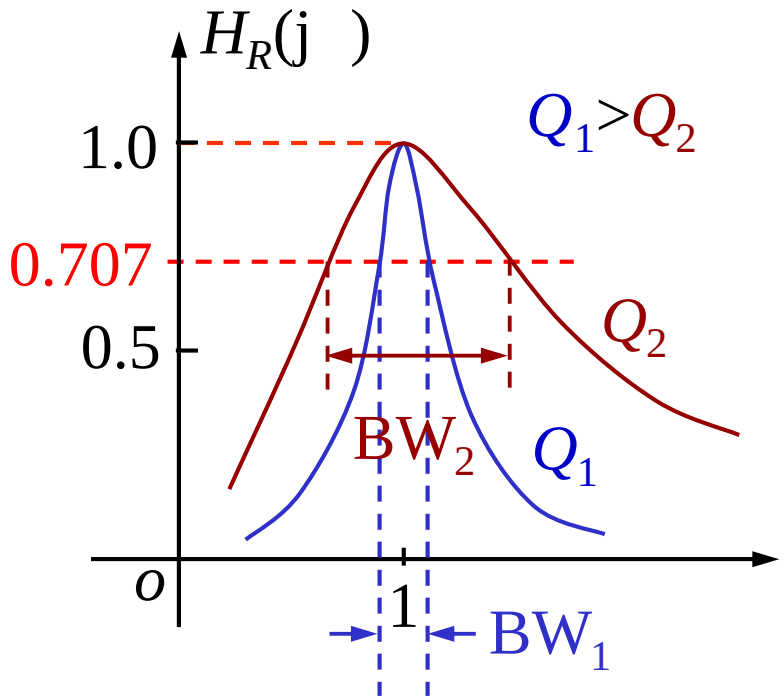

2.

$$H_C(\mathrm{j}\ ) \quad \frac{\dot{U}_C(\mathrm{j}\ )}{\dot{U}_S(\mathrm{j}\ )} \quad \frac{\mathrm{j}Q}{\mathrm{j}Q^{\ 2}}$$

$$\dot{U}_C(\mathrm{j}\ ) \qquad \dot{U}_R(\mathrm{j}\ )\ 90^{\mathrm{o}}$$

$$|H_C(\mathrm{j}\ )| \quad \frac{Q}{\sqrt{Q^{\ 2}}} \qquad C2 \quad \sqrt{\frac{}{4Q}}$$

$$\frac{\mathrm{d}|H_C(\mathrm{j}\ )|}{\mathrm{d}}$$

$$_{C2} \quad \sqrt{\quad \overline{4Q}} \qquad 1$$

$$|H_C(j \quad _{C2})| \quad \frac{Q}{\sqrt{\quad \overline{4Q}}} \qquad Q$$

$$Q \quad \frac{1}{\sqrt{2}}$$

$$Q \qquad _{C2} \qquad 1$$

$$|H_C(j \quad _{C2})| \qquad 1 \qquad Q$$

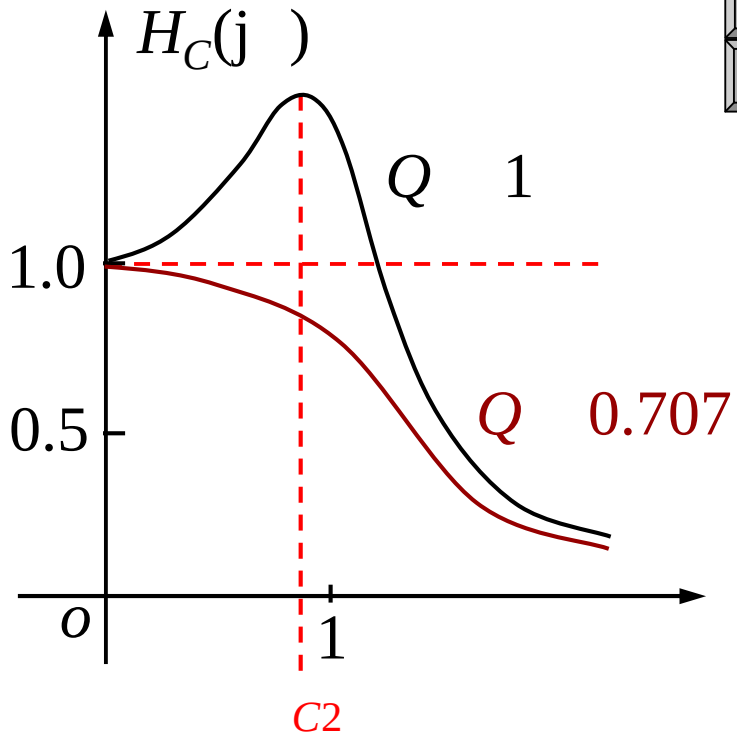

$|H_C(\mathrm{j}\ )|\quad \frac{1}{\sqrt{2}}$

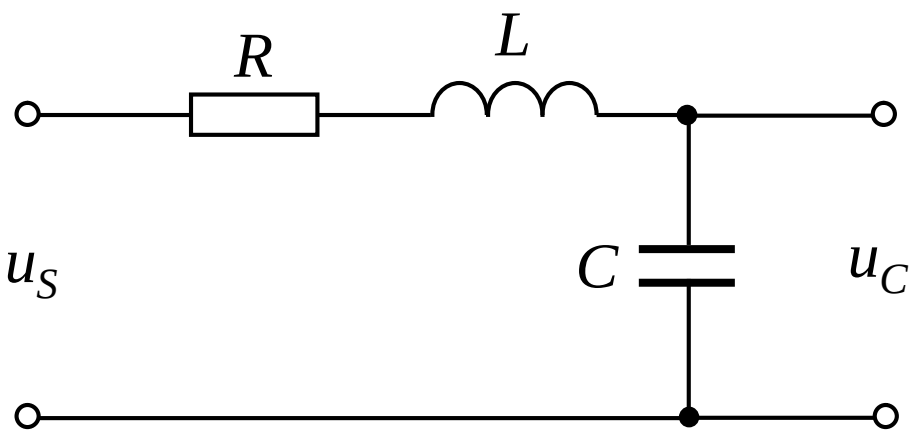

j 1.55 0

0~ j

3.

$|H_L(\mathrm{j}\ )|\quad |H_C(\mathrm{j}\ )|$

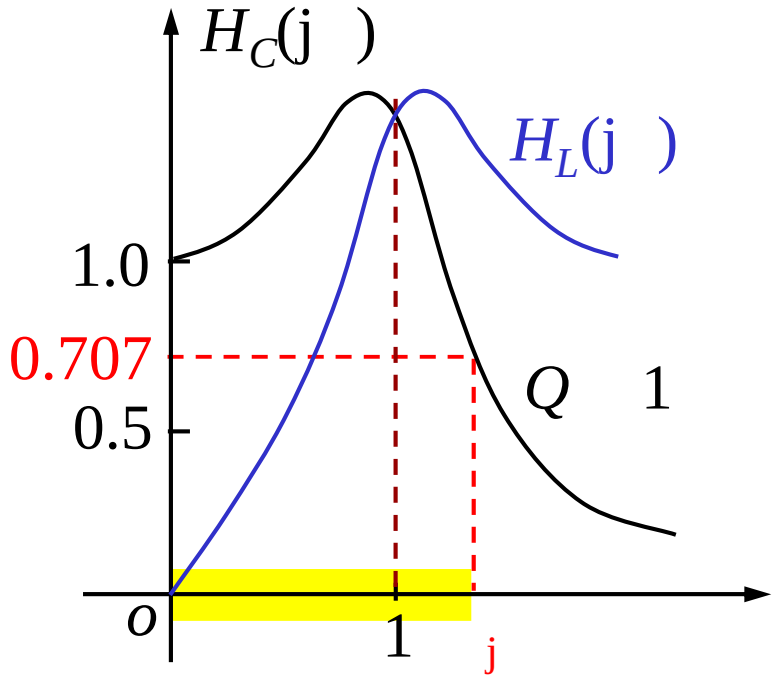

11−4 *RLC*

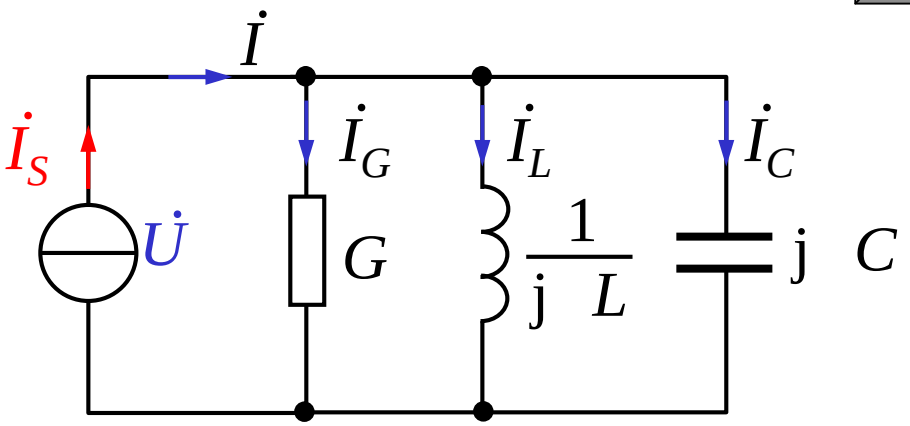

$$Y(\mathrm{j}\ ) \quad G \quad \mathrm{j}(\quad C \quad \frac{1}{L})$$

1. $_0C \quad \frac{}{_0L} \quad 0$

$$\frac{1}{\sqrt{LC}}$$

$$f \quad \frac{1}{2 \quad \sqrt{LC}}$$

f_0

$L \quad C$

G

2.

(1)

(2)

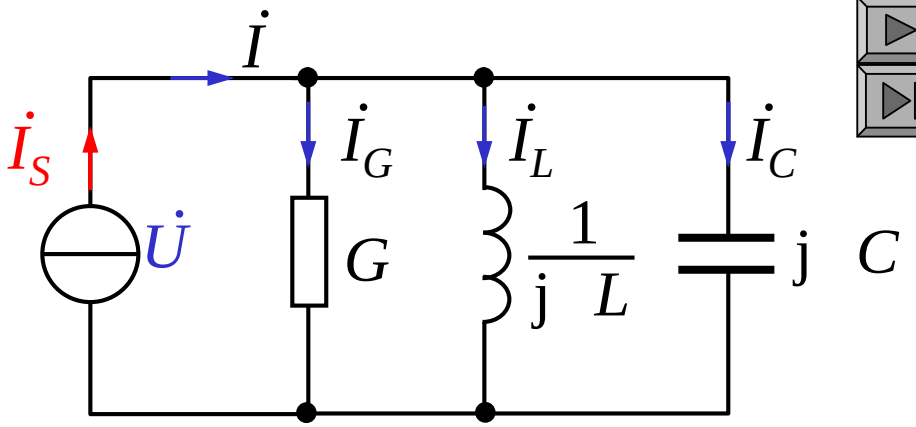
$\dot{I}$
$\dot{I}_S$
$\dot{U}$
$\dot{I}_G$
G
$\dot{I}_L$
$\frac{1}{\mathrm{j}\ L}$
$\dot{I}_C$
$\mathrm{j}\ C$

$I_L(\quad_0)$

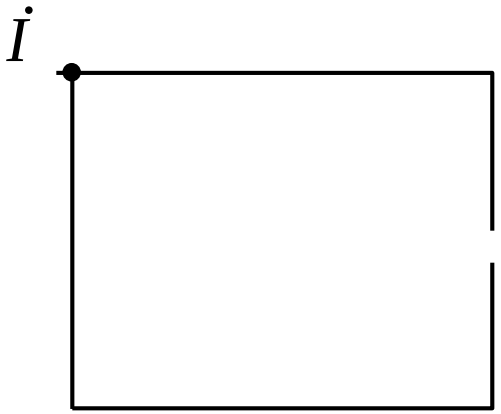

3. Q

$$Q_C \quad {}_0CU^2$$

$$Q_L \quad \frac{1}{{}_0L}U^2$$

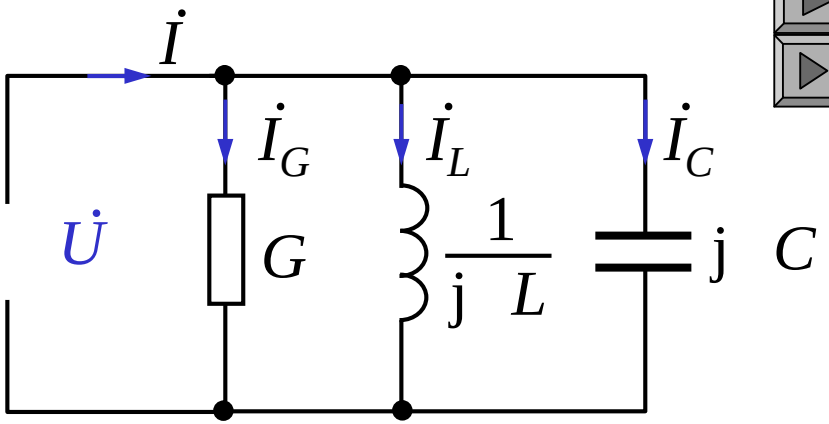

4.

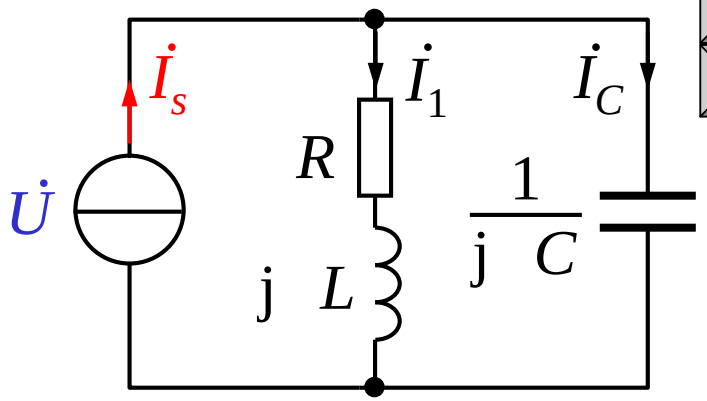

$$Y(\mathrm{j}\ _0)\ \mathrm{j}\ _0C\ \ \frac{1}{R\ \mathrm{j}\ _0L}$$

$$\frac{R}{R^2\ (\ _0L)^2}\ \ \mathrm{j}\ \ _0C\ \ \frac{_0L}{R^2\ (\ _0L)^2}$$

$$\mathrm{Im}[Y(\mathrm{j}\ _0)]$$

$$C\ \ \frac{L}{R^2\ (\ _0L)^2}$$

$$_0\ \ \frac{1}{\sqrt{LC}}\sqrt{1\ \ \frac{CR^2}{L}}$$

$$1\ \ \frac{CR^2}{L}>0$$

$$R\ \ \sqrt{\frac{L}{C}}\qquad 0$$

$$R>\sqrt{\frac{L}{C}}$$

0 C $\frac{L}{R^2 \quad (\quad {}_0 L)^2}$

$Y(\mathrm{j} \quad {}_0)$ $\frac{RC}{L}$ $Z(\mathrm{j} \quad {}_0)$ $\frac{L}{RC}$

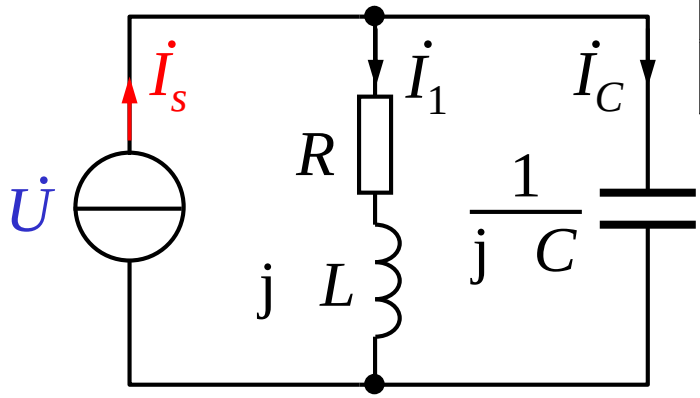

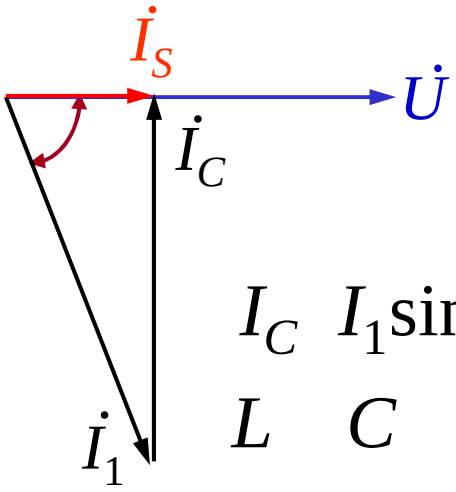

$I_C \quad I_1 \sin \qquad I_S \,\mathrm{tg}$

$L \quad C$

0 $\frac{1}{\sqrt{LC}}$ Q $\frac{{}_0 L}{R}$ $\frac{1}{{}_0 CR}$

$\frac{1}{R}\sqrt{\frac{L}{C}}$ $\frac{I_1}{I_S}$ $\frac{I_C}{I_S}$

Q

LC

L

$$f \quad \frac{1}{2 \sqrt{LC}}$$

C

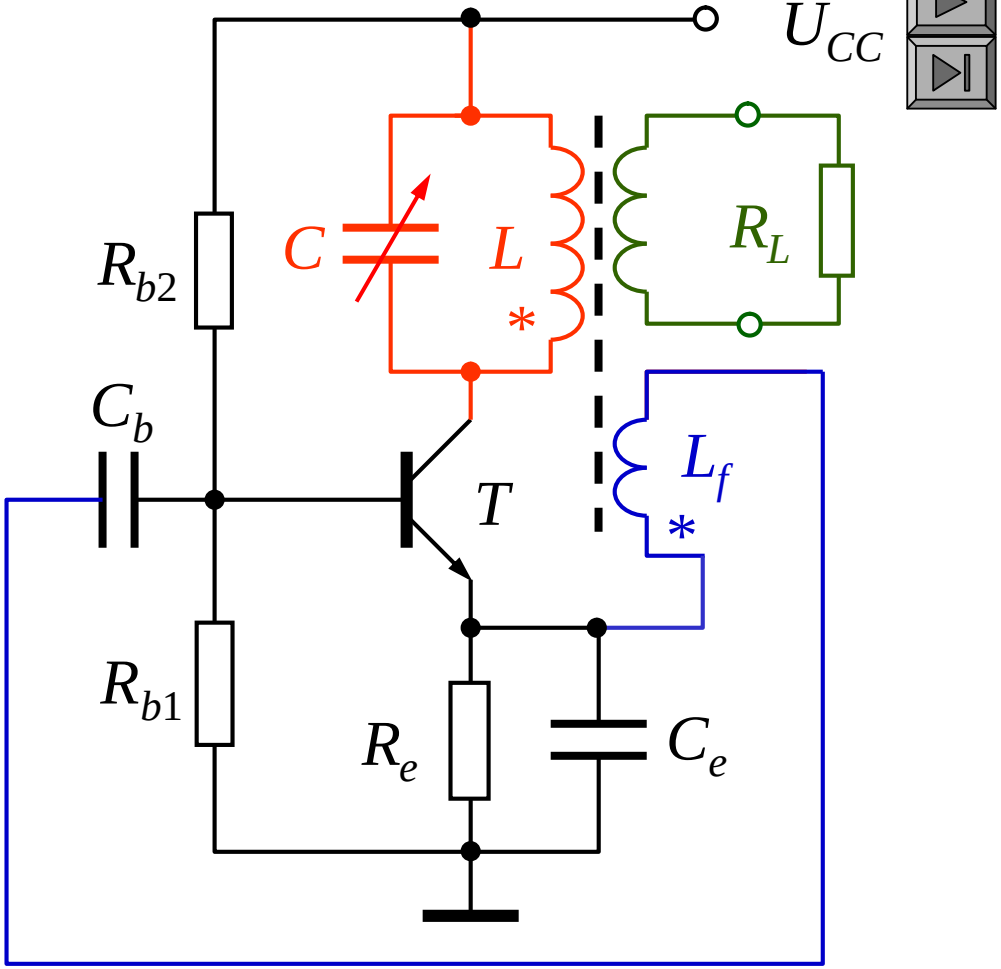

11 5 (Bode)

- Bode

lg

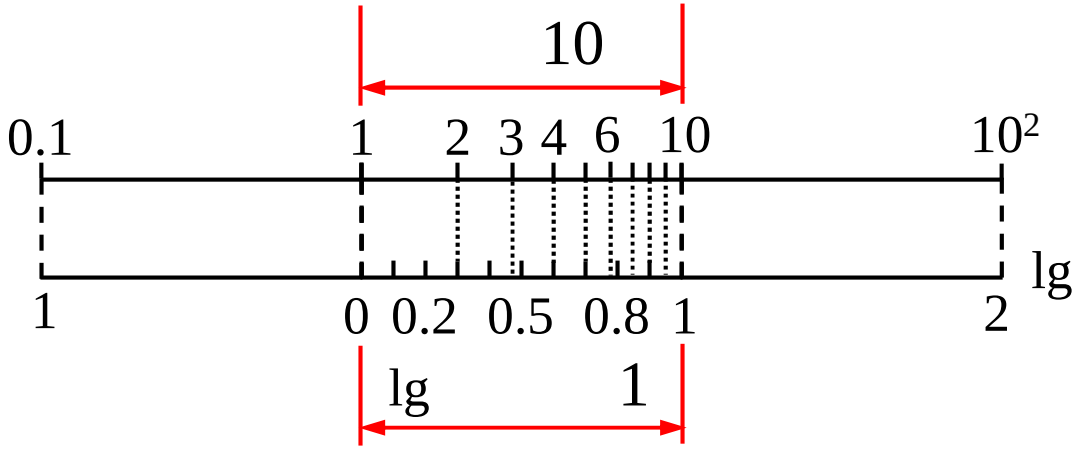

dec

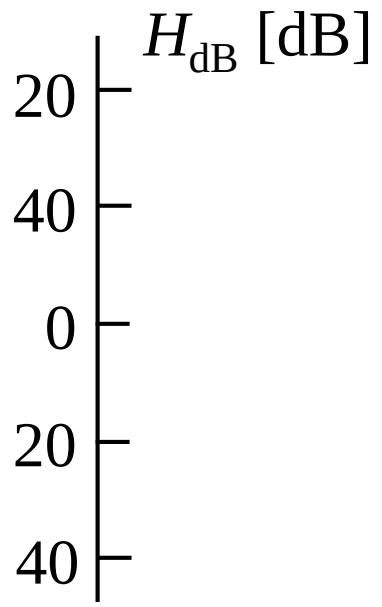

(

)

H_{dB} 20lg$H$(j)

(dB)

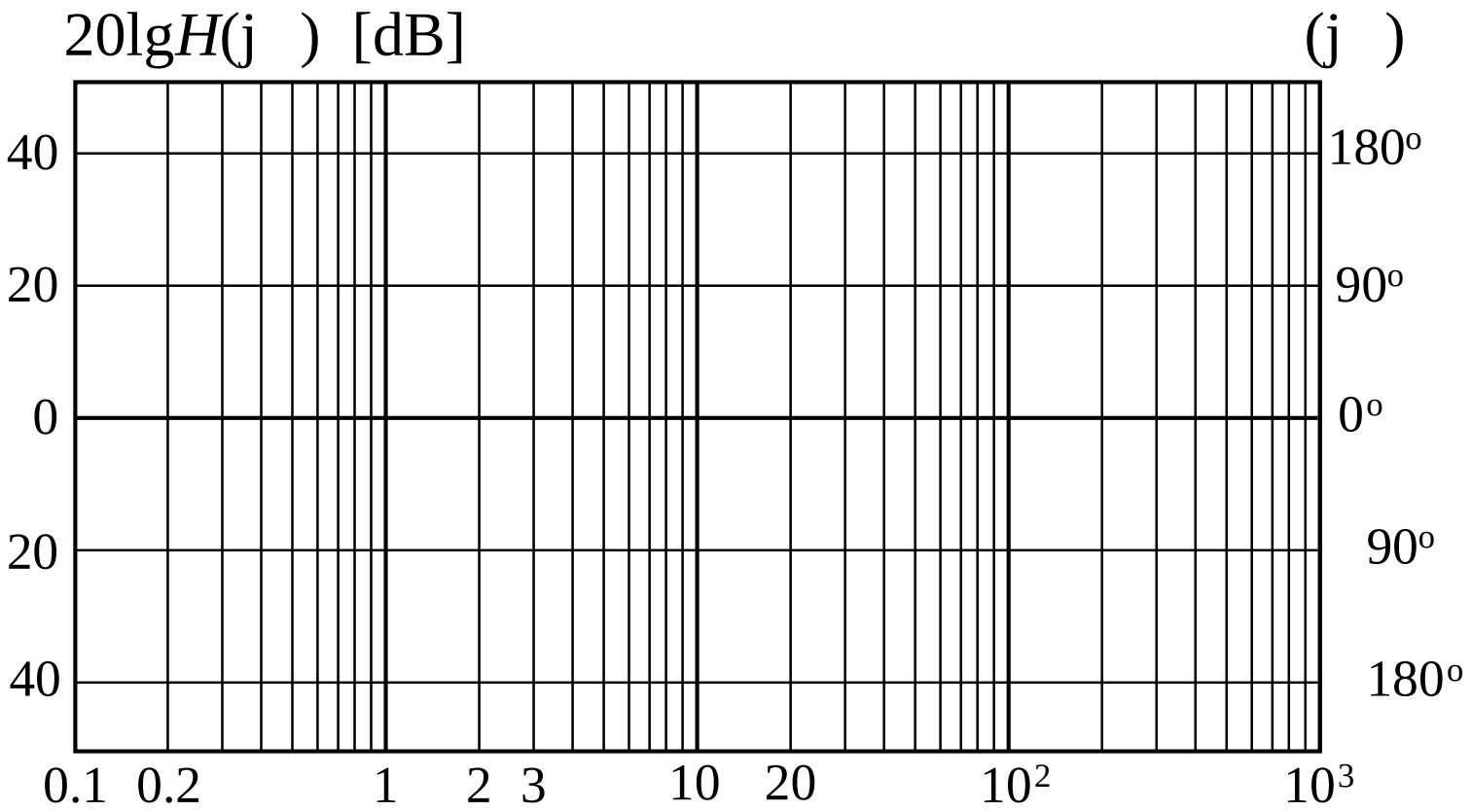
20lg$H$(j) [dB]
(j)
40
20
0
20
40
180o
90o
0o
90o
180o
0.1
0.2
1
2
3
10
20
10²
10³

( )

11 4

Bode

$$H(j\ ) \quad \frac{j200}{(j\quad 2)(j\quad 10)}$$

$$\frac{j10}{(1\ \ j\ \ /2)(1\ \ j\ \ /10)}$$

$$H_{dB}\ \ 20\lg(10\ \ )\ \ 20\lg|1\ \ j\ \ /2|\ \ 20\lg|1\ \ j\ \ /10|$$

$$90^{o}\ \ \text{arctg}(\ \ /2)\ \ \text{arctg}(\ \ /10)$$

20lg(10) 20lg(10) 0d

20lg(10) 0d

(0) 20d /dec

H_{dB} 20lg(10) 20lg|1 j /2| 20lg|1 j /10|

20lg|1 j /2|

20lg|1 j /2| 0d

20lg|1 j /2| 20lg(/2)

20lg(/2) 0 20lg(/2) 20dB

(2 0) 20dB/dec

20lg|1 j /10|

20lg|1 j /10| 0d

(10 0) 20dB/dec

90° arctg(/2) arctg(/10)

90°

0.1 0°

10 90°

(0.1~10) 45°/dec

11 6

RC

LC

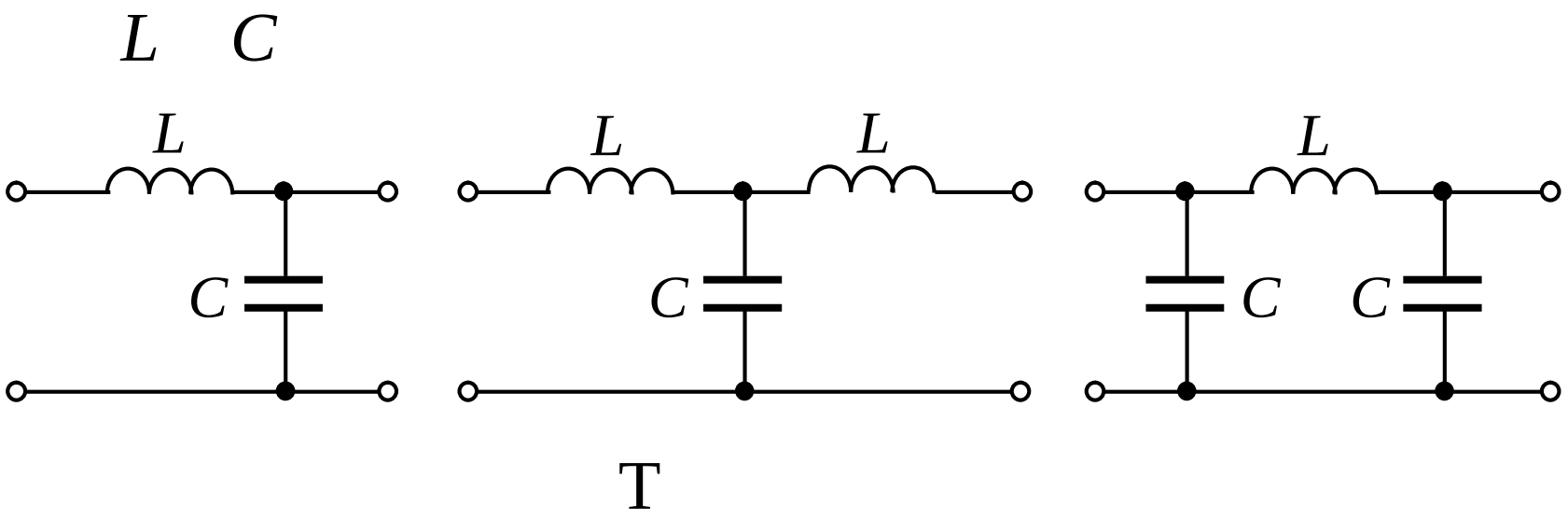
L C
L
C
L
L
C
L
C
C
T

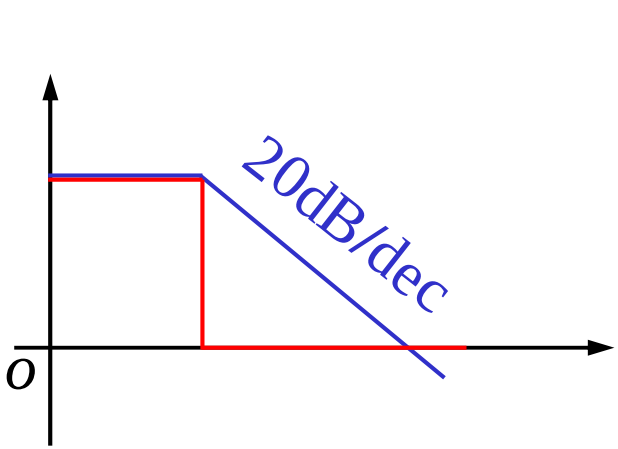

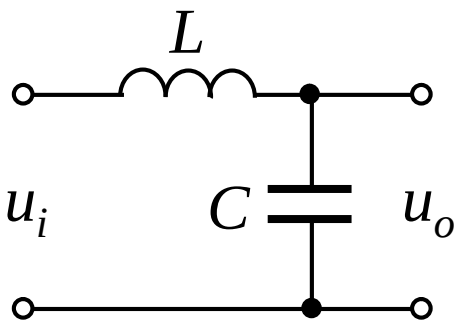

L C

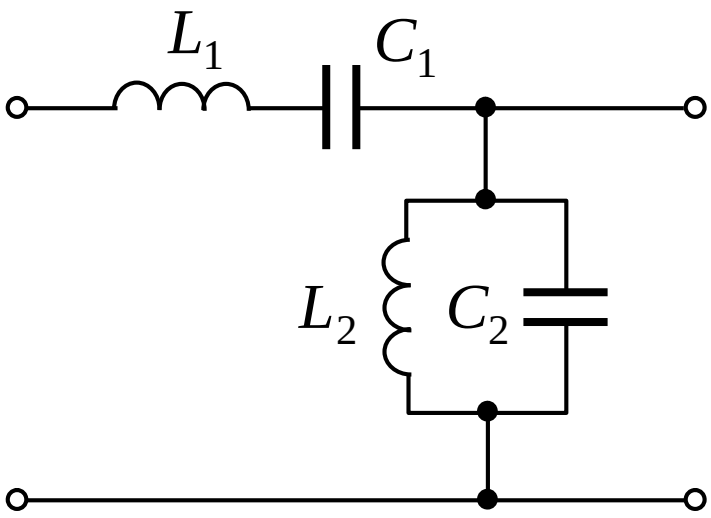

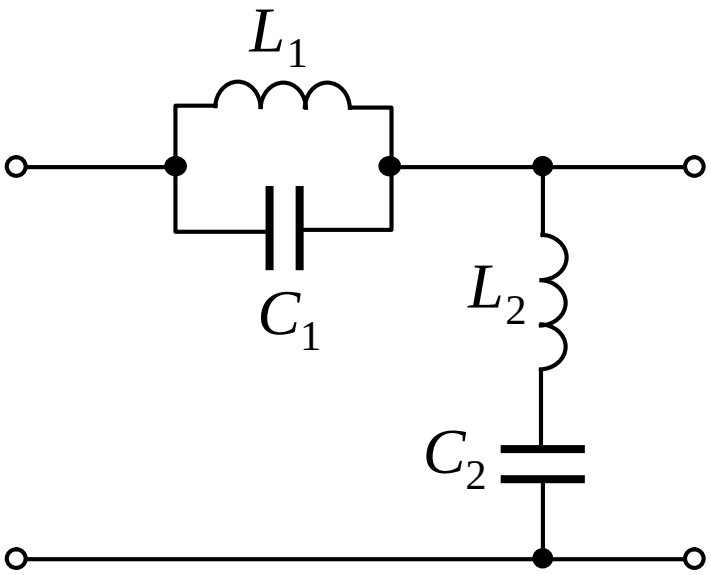

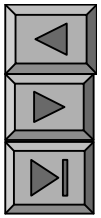

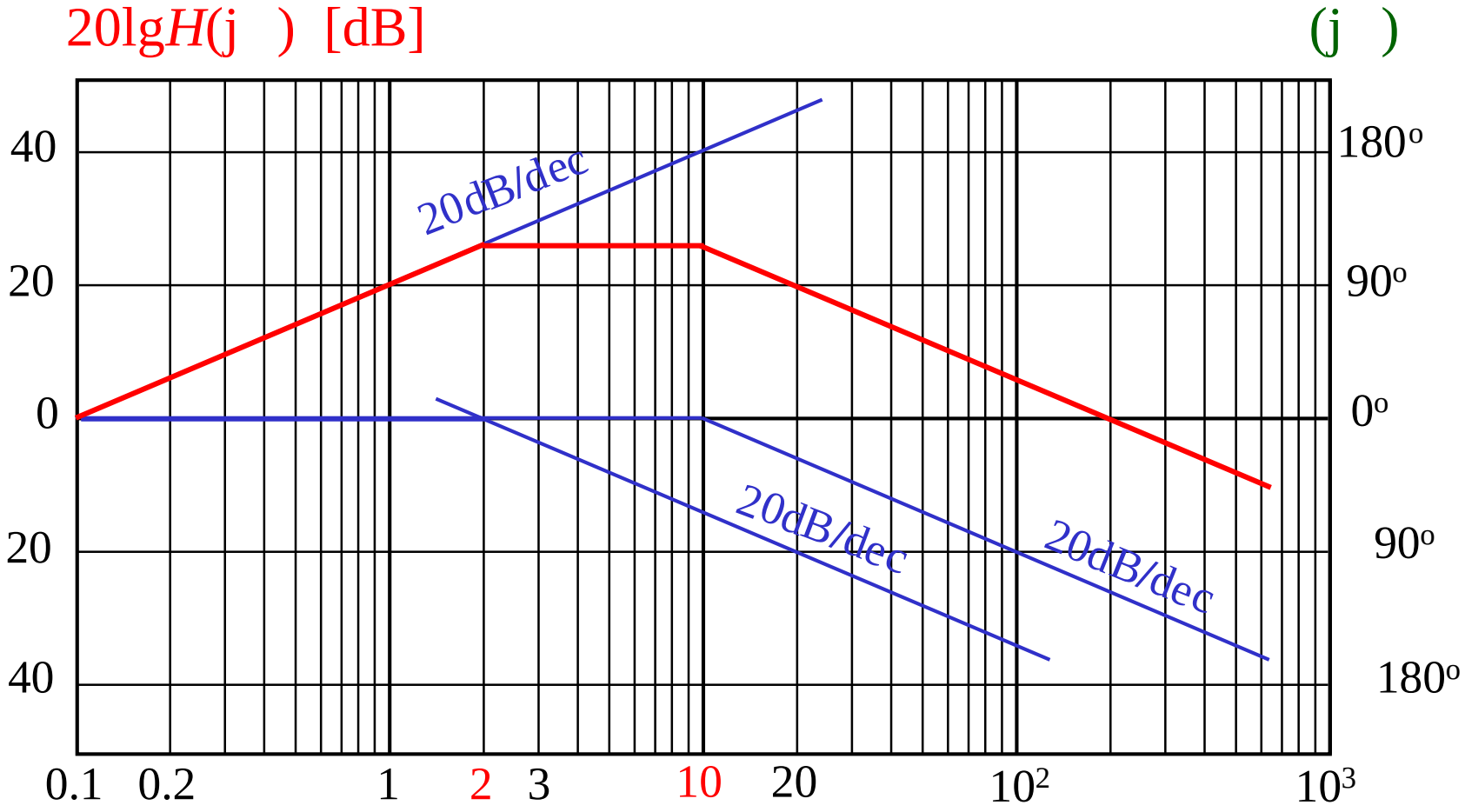
20lg*H*(j) [dB]
(j)
40
20
0
20
40
180°
90°
0°
90°
180°
20dB/dec
20dB/dec
20dB/dec
0.1
0.2
1
2
3
10
20
10²
10³

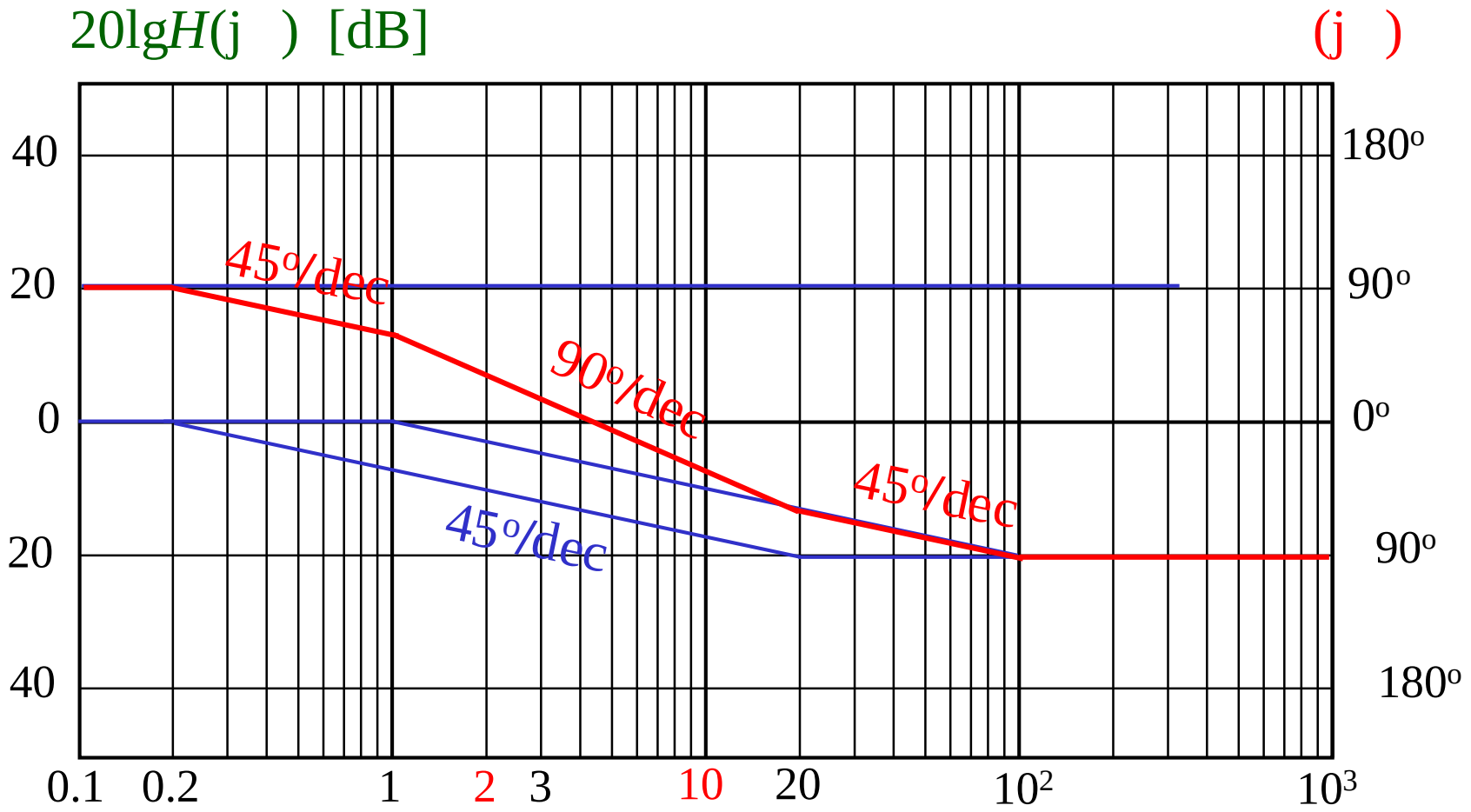
20lg*H*(j) [dB]
(j)
40
20
0
20
40
180º
90º
0º
90º
180º
45º/dec
90º/dec
45º/dec
45º/dec
0.1
0.2
1
2
3
10
20
10²
10³

11 19 (1) $H(j\ ) \quad \frac{1}{10\ \ j}$

$H(j\ ) \quad \frac{0.1}{1\ \ j}$ 10

H_{dB} 20lg0.1 20lg|1 j /10|

10 20dB

10 H_{dB} 20lg0.1 20lg(/10)

(10 20) 20dB/dec

20dB

10

20dB/dec

arctg(/10)

0.1 (10) 0°

10 90° ( )

(0.1~10) 45°/dec

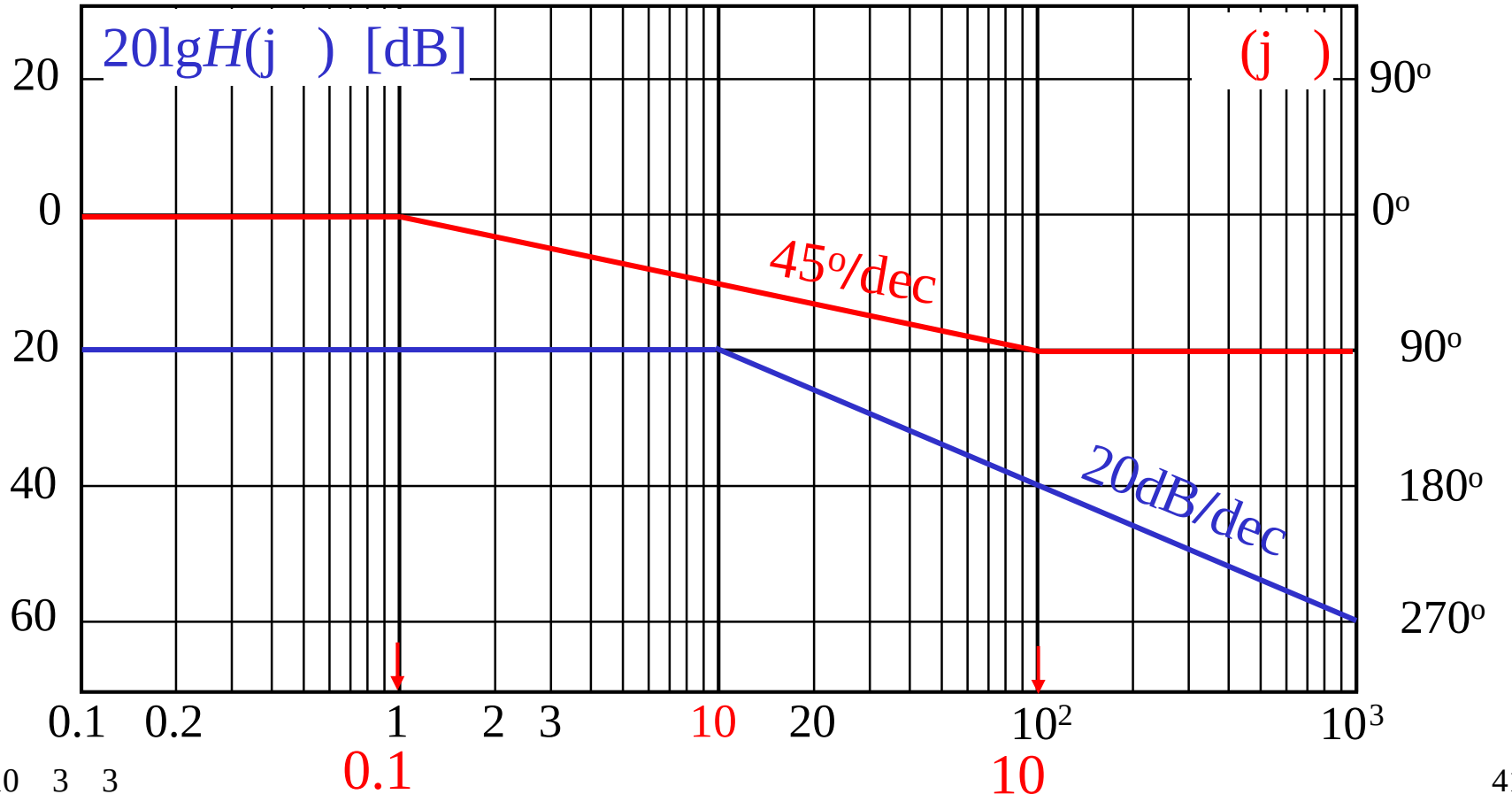

11 19 (2) $H(j\ )\ \dfrac{5\ j\ \ 2}{j\ \ j\ \ 10}\ \ \dfrac{1\ j}{j\ \ 1\ j}$

H_{dB} 20lg 20lg|1 j /2| 20lg|1 j /10|

20lg (1 0)
20dB/dec

+20dB/dec

20dB/dec

$$H_{\text{dB}} \quad 20\lg \quad 20\lg|1 \;\; j \;\; /2| \;\; 20\lg|1 \;\; j \;\; /10|$$
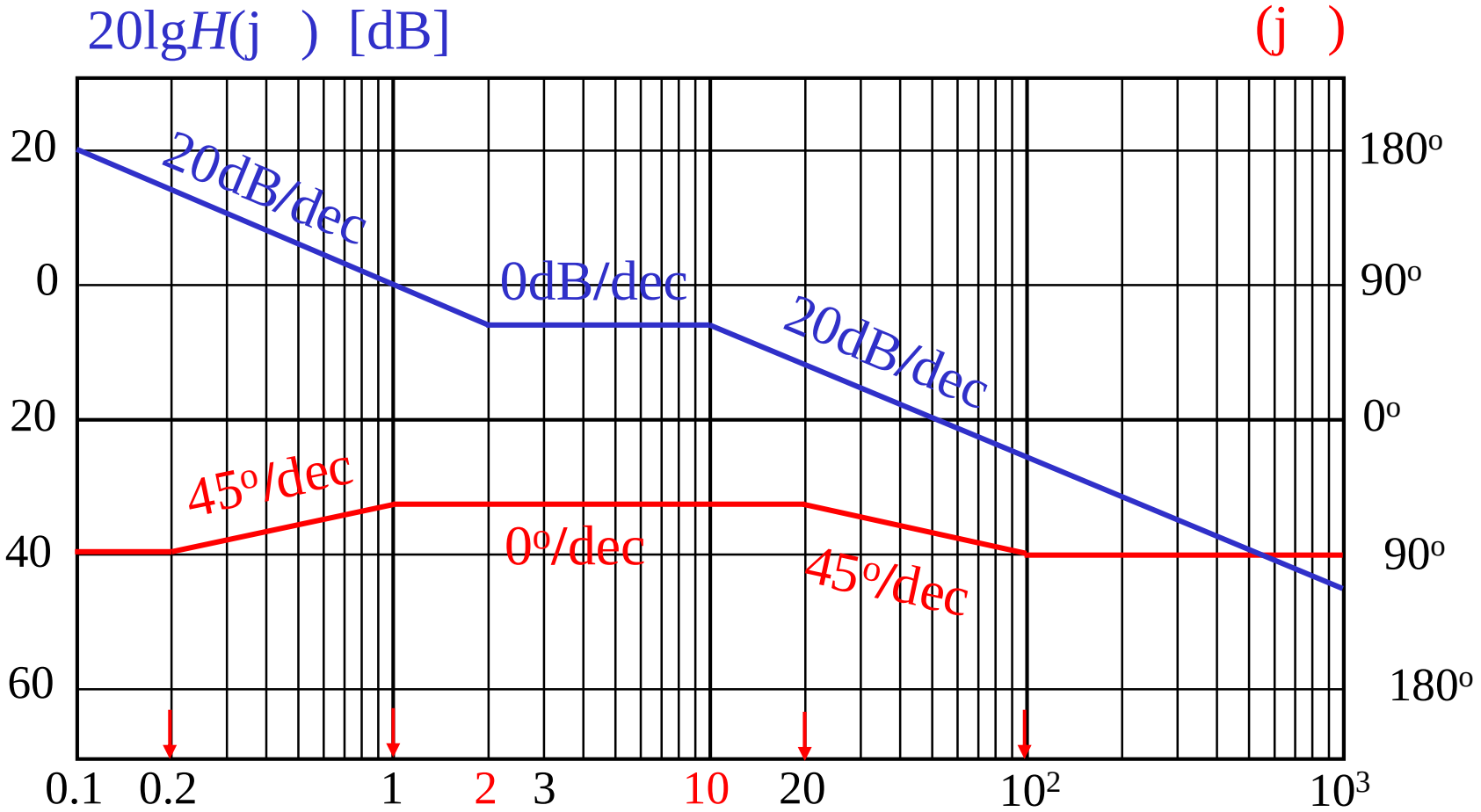
$$90^{o} \;\; \text{arctg}(\;\; /2) \;\; \text{arctg}(\;\; /10)$$