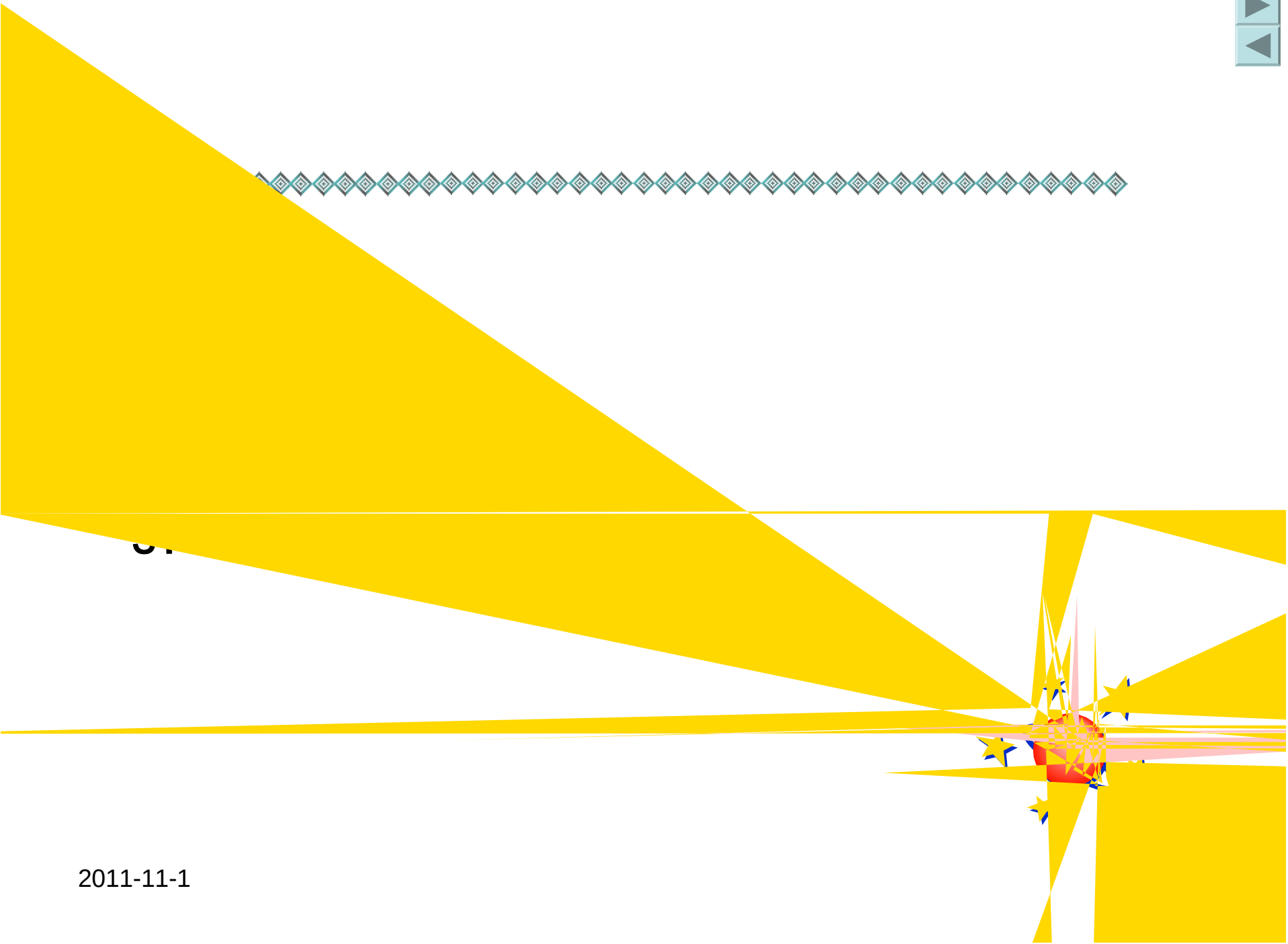

2011-11-1

2011-11-1

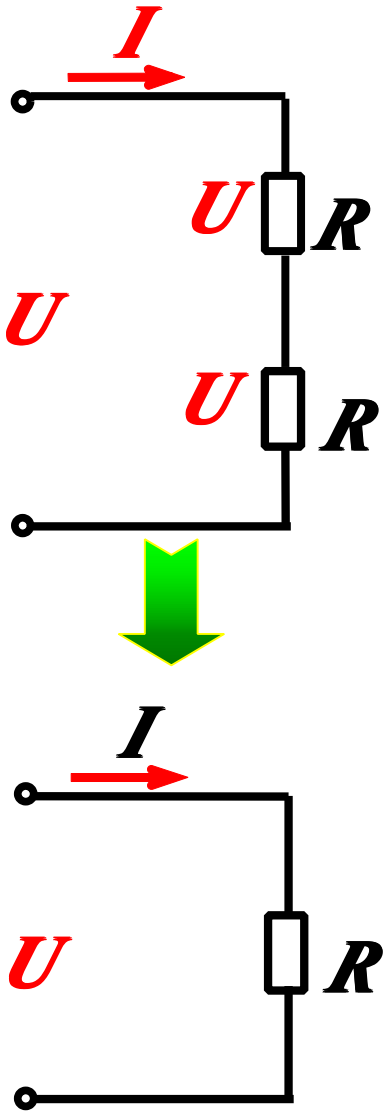

$R \quad R \quad R$

$$U \quad \frac{R}{R+R}U \qquad U \quad \frac{R}{R+R}U$$

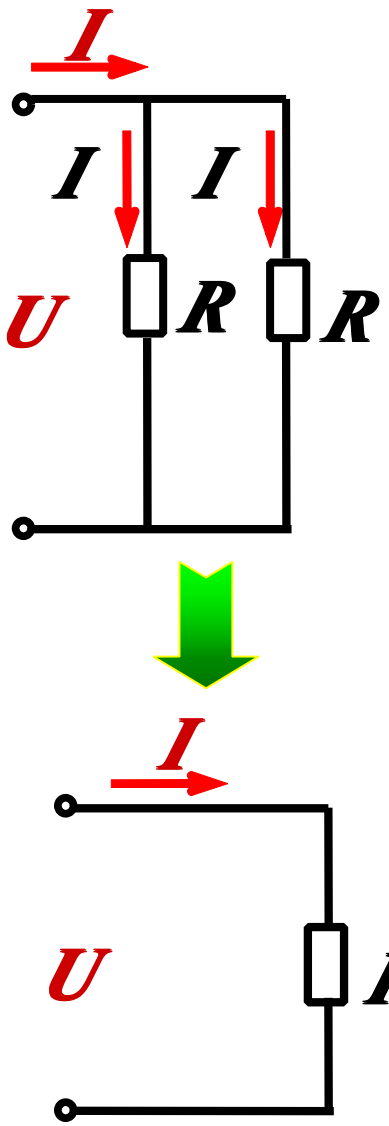

$$\frac{}{R} \quad \frac{}{R} + \frac{}{R}$$

$$I \quad \frac{R}{R+R} I \qquad I \quad \frac{R}{R+R} I$$

U

$R'' =$

$R' =$

$U = \frac{R'}{R'} \times$

$=$

$U = \frac{R''}{R''} \times U =$

$U = \frac{\quad}{\quad} \times U =$

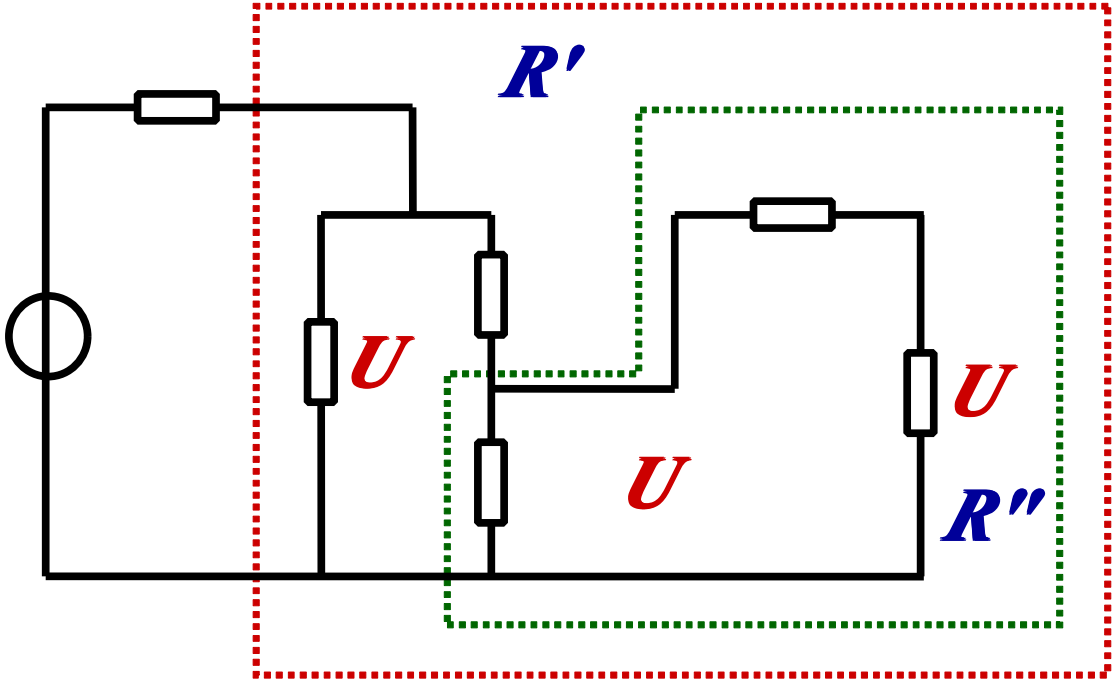

R

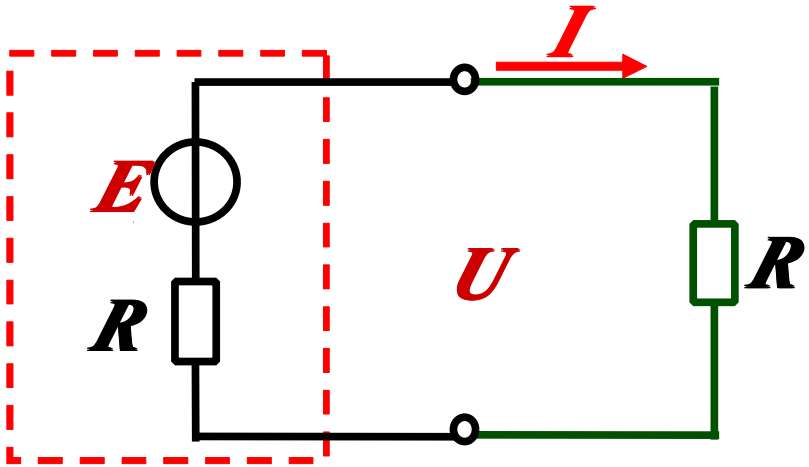

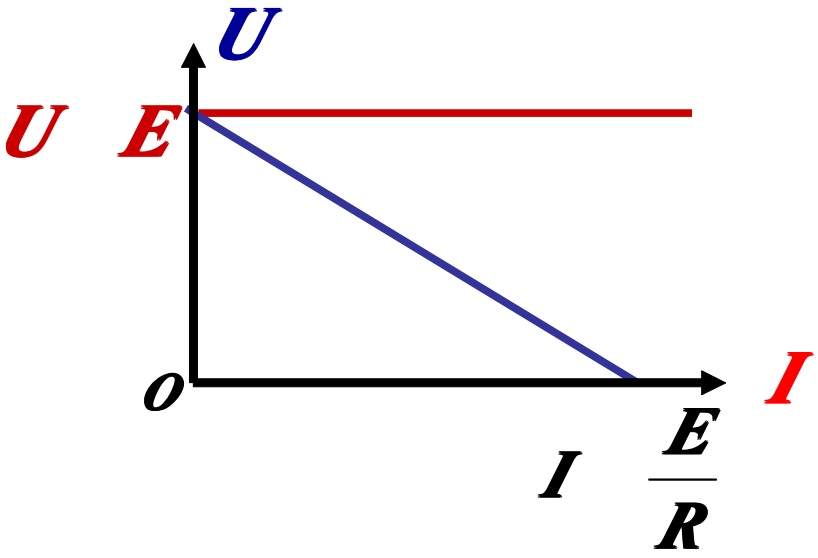

$U \quad E - IR$

R

$U \quad E$

$R \quad R \quad U \quad E$

R

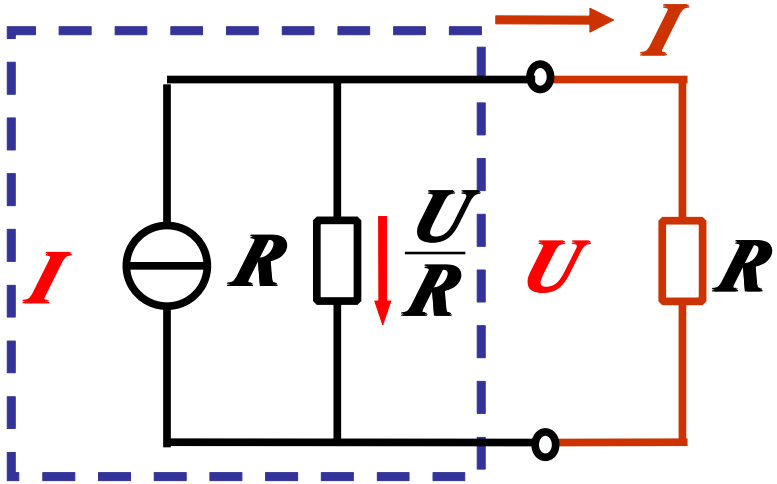

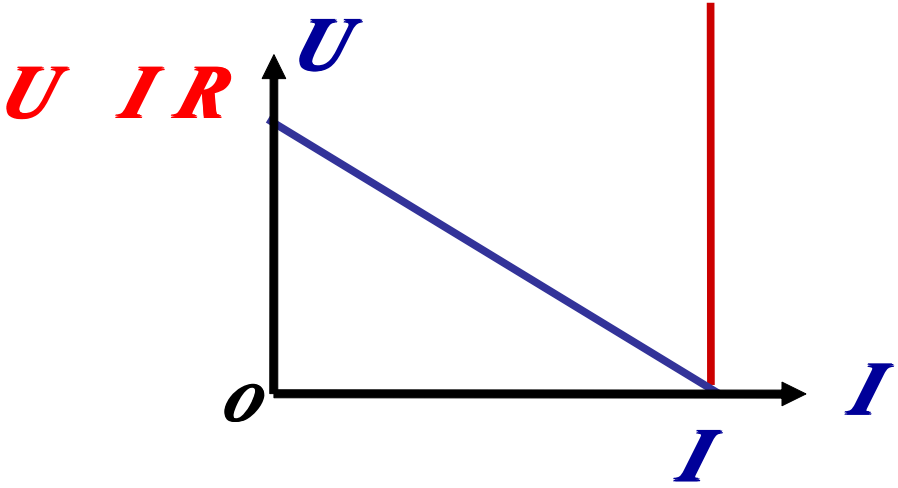

$$I \quad I - \frac{U}{R}$$

R

$I \quad I$

$R \quad R \quad I \quad I$

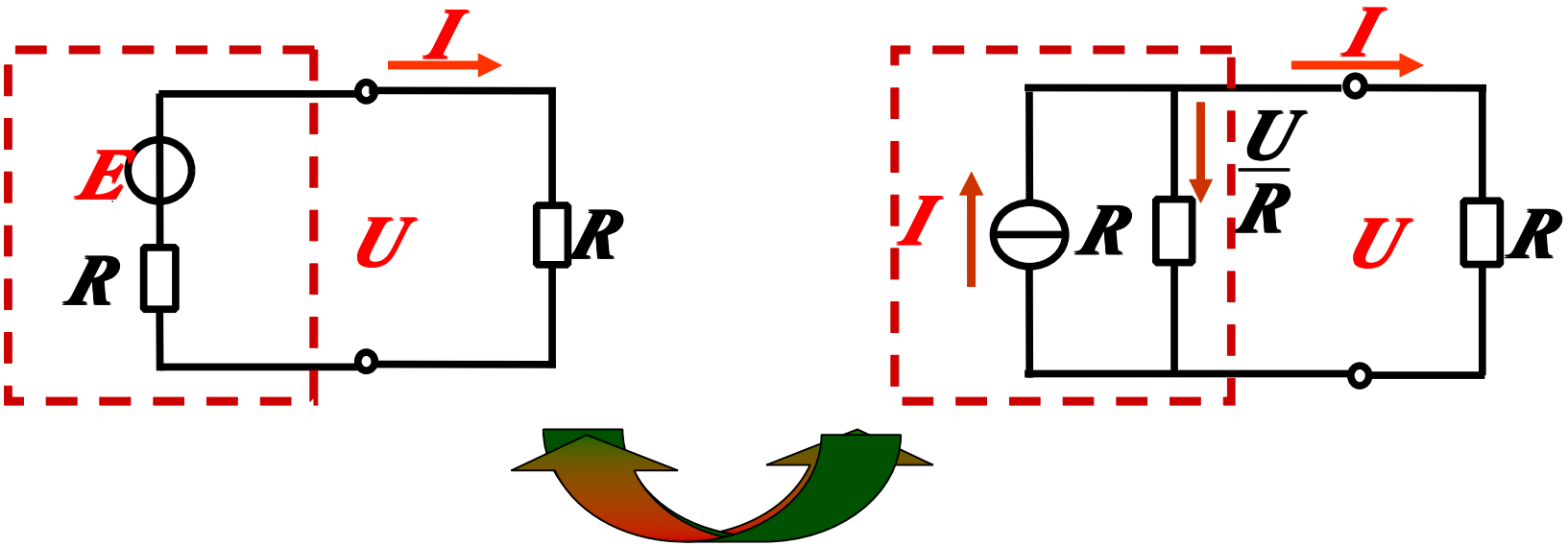

$$U = E - IR$$

$$= - -$$

$$= -$$

$$\begin{cases} E = IR \\ I = \dfrac{E}{R} \end{cases}$$

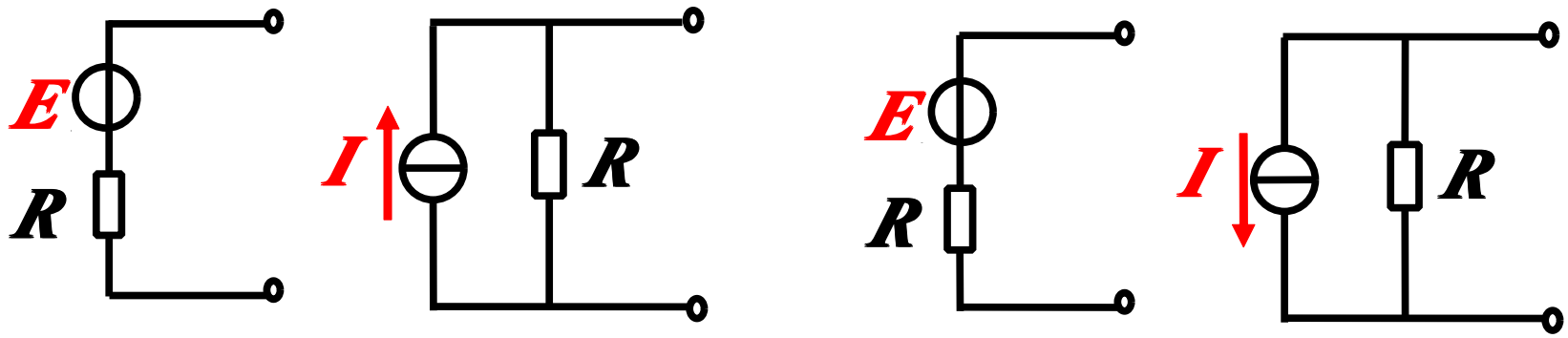

E R

I

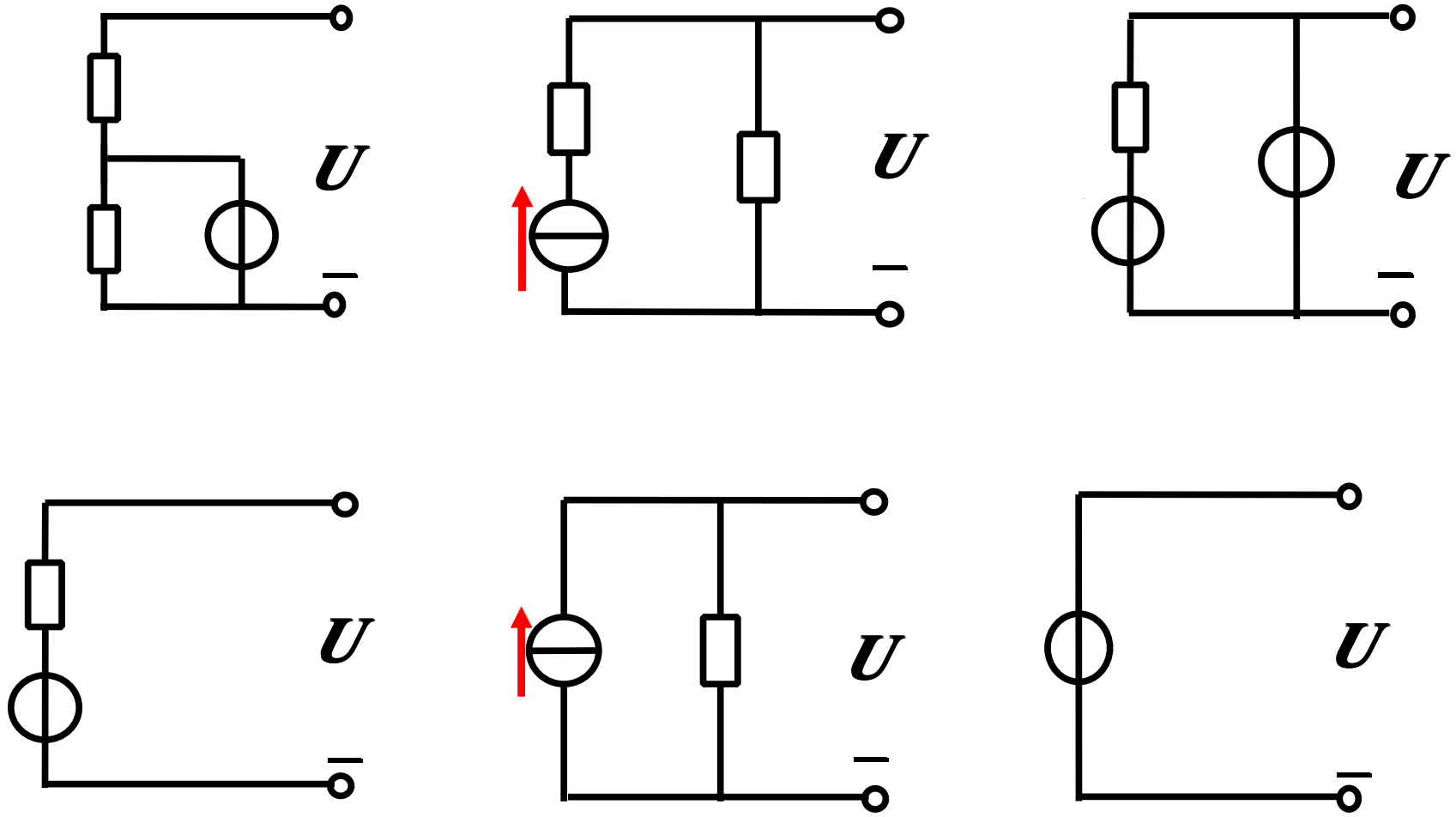
U
U
U
U
U
U

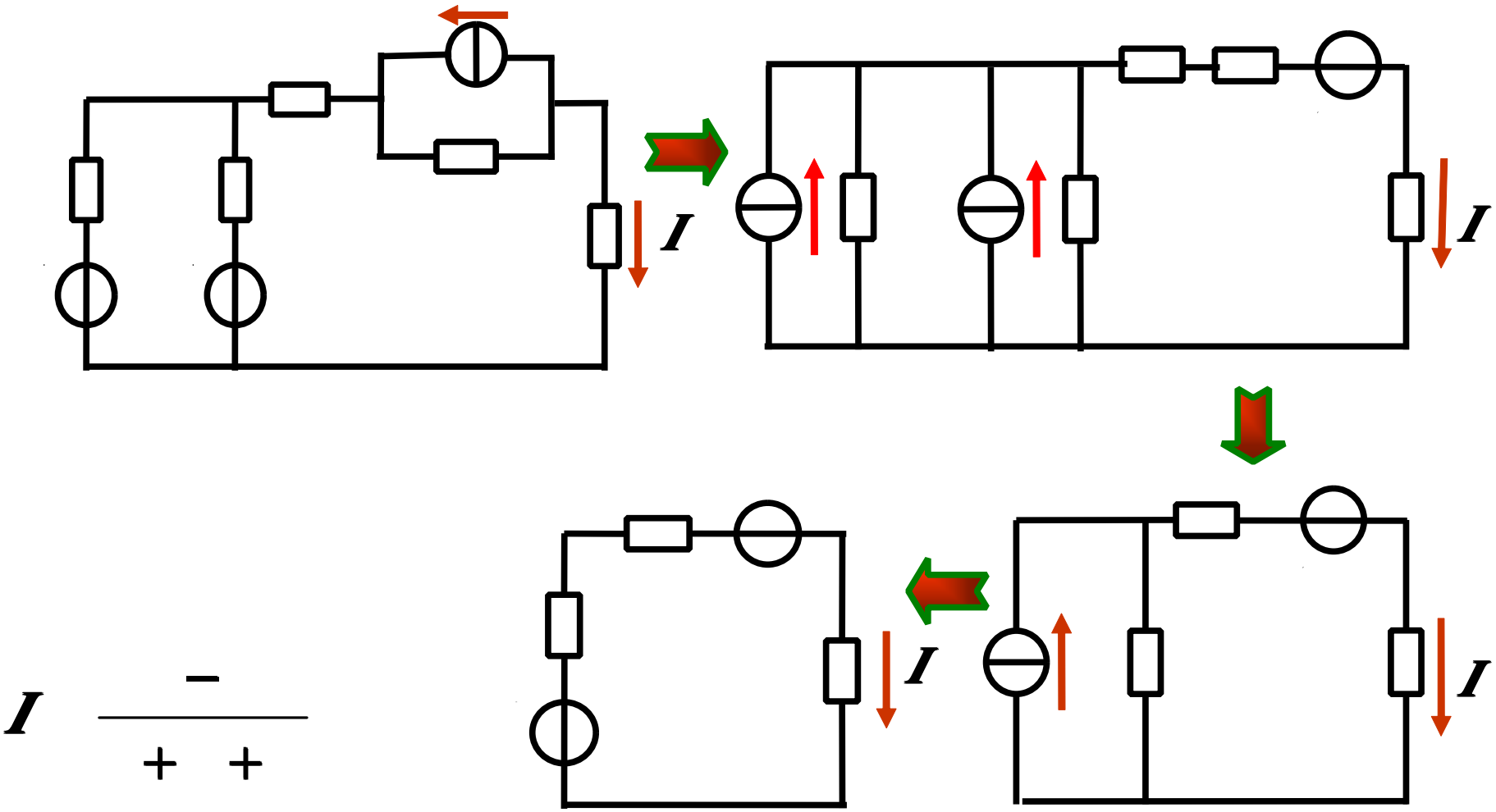
I
I
I
I
I
−
+ +

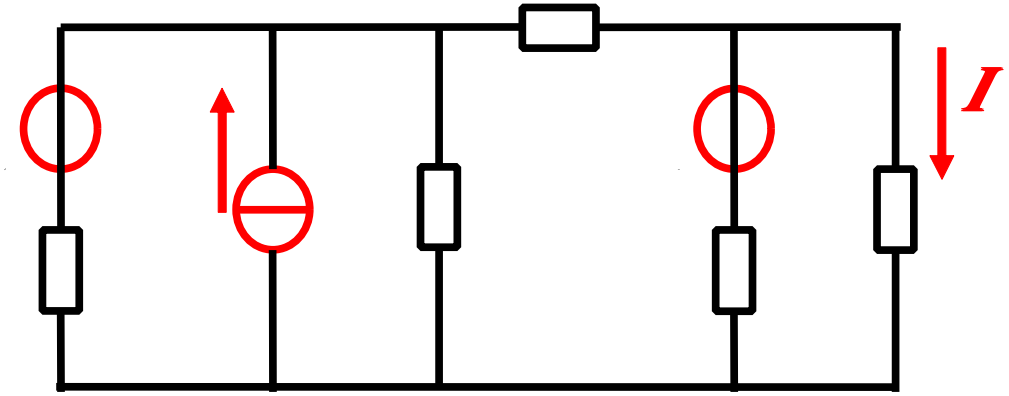
I

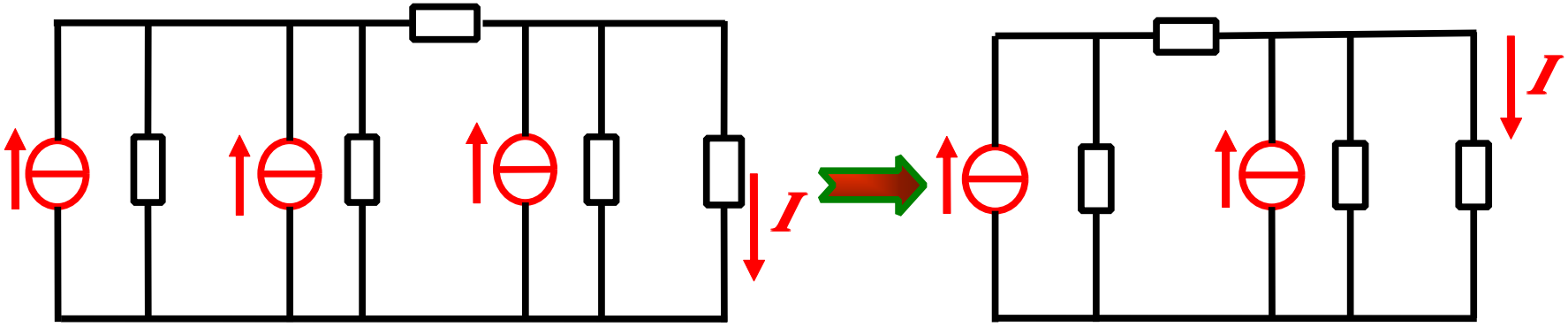
I
I

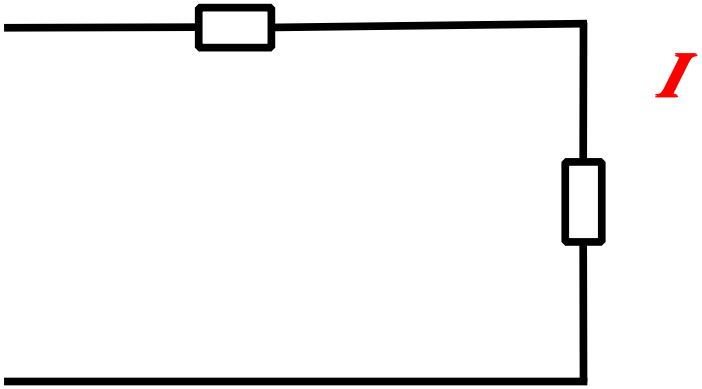
I

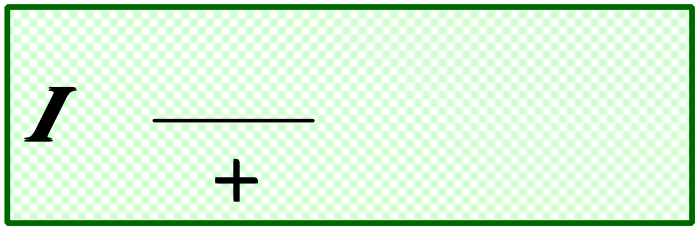
I
+

b

n

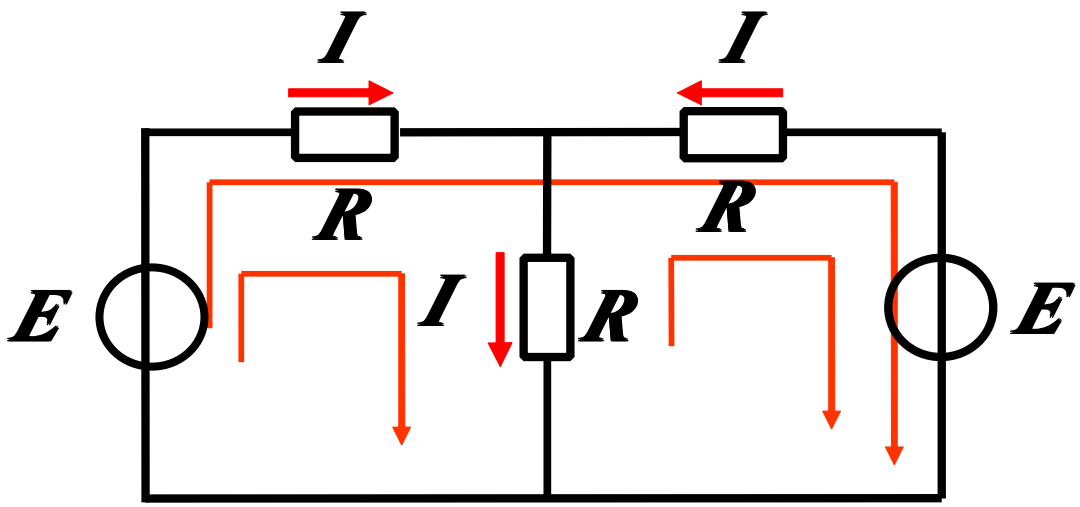

n

b n

b

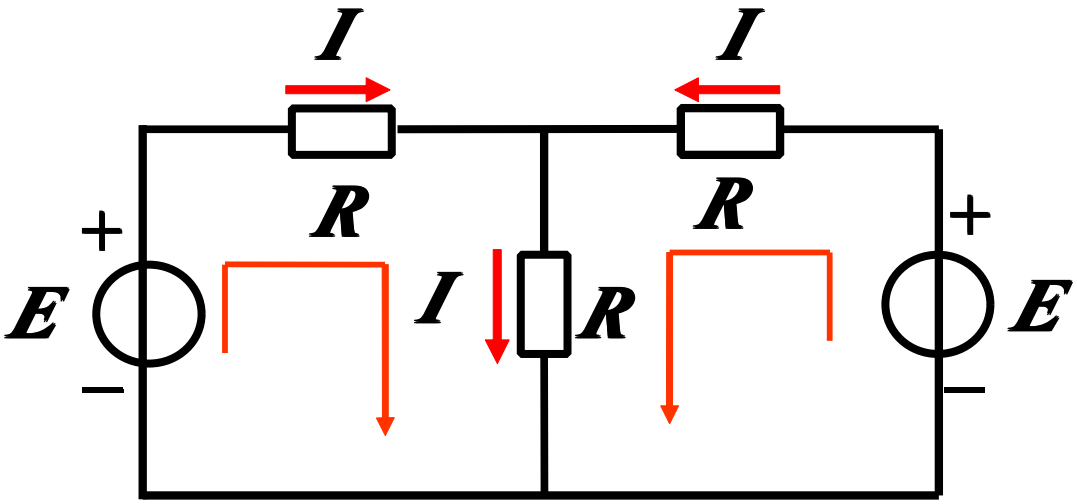

I I I

I R I R E

I R I R E

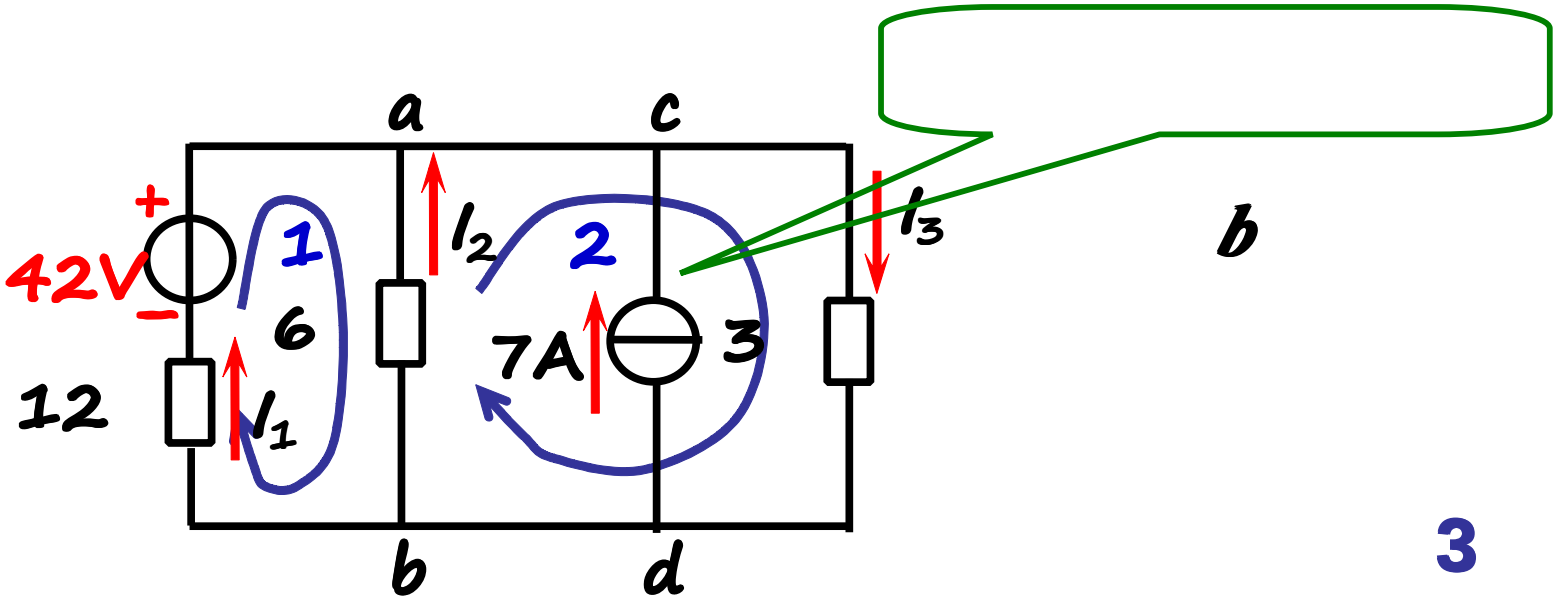

3

b

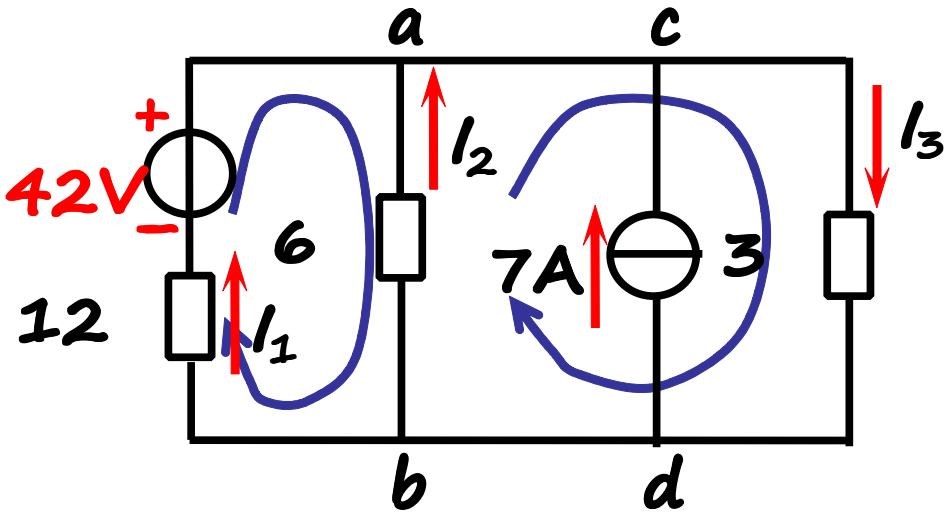

I I I

I I

I I

I I I

b

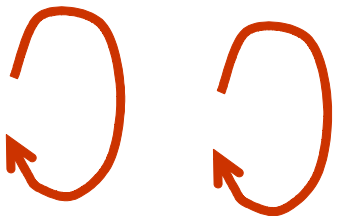

n

I

b

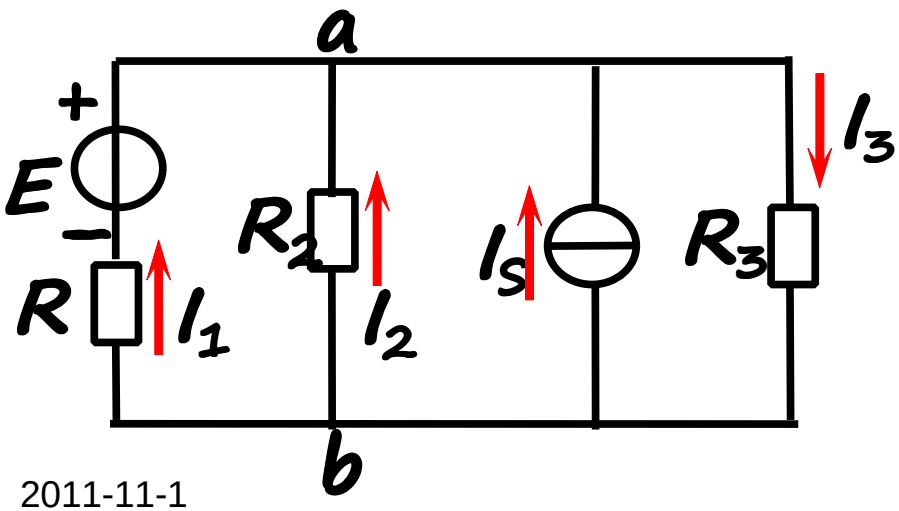
a
+
E
−
R
I_1
R_2
I_2
I_S
R_3
I_3
b

V

U

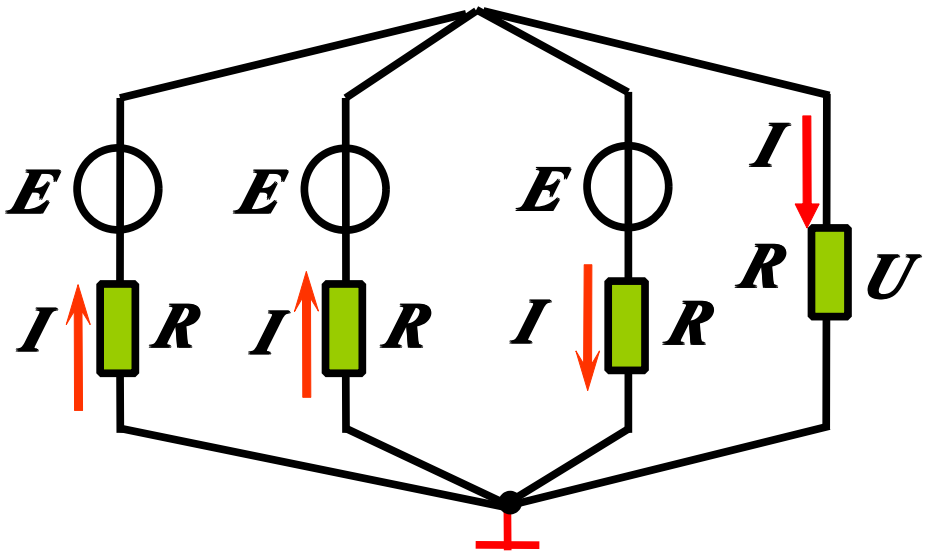

$I \quad I \quad I \quad I$

$$I \quad \frac{E - U}{R}$$

$$U \quad E - I R$$

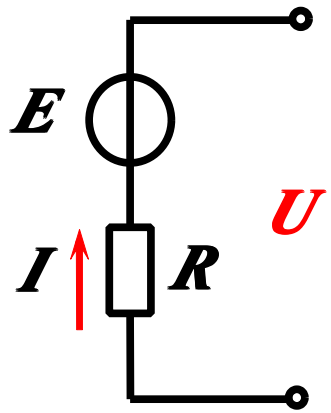

$$I \quad \frac{-E + U}{R} \quad I \quad \frac{U}{R}$$

$$I \quad \frac{E - U}{R}$$

$$\frac{\quad -}{\quad} + \frac{\quad 2 \quad -}{\quad} - \frac{\quad - \quad +}{\quad} - \frac{\quad}{\quad} =$$

$$U \quad \frac{\frac{E}{R} + \frac{E}{R} + \frac{E}{R}}{\frac{\quad}{R} + \frac{\quad}{R} + \frac{\quad}{R} + \frac{\quad}{R}}$$

$$U \quad \frac{\frac{E}{R}}{\frac{\quad}{R}}$$

$$E$$

1

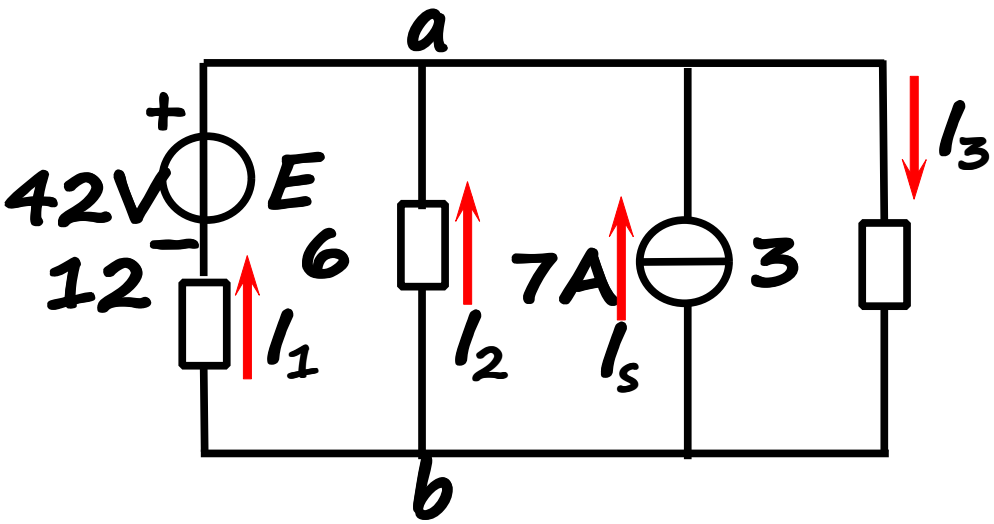

U

$$U \quad \frac{\frac{E}{R} + I}{\frac{\quad}{R} + \frac{\quad}{R} + \frac{\quad}{R}}$$

$$I \quad \frac{-U}{\quad} \quad \frac{-}{\quad}$$

$I \quad U$

$$I \quad - \frac{U}{\quad} \quad - \frac{\quad}{\quad} \quad -$$

$$U \quad \frac{\quad + \quad}{\quad + \quad + \quad}$$

$$I \quad \frac{U}{\quad} \quad \frac{\quad}{\quad}$$

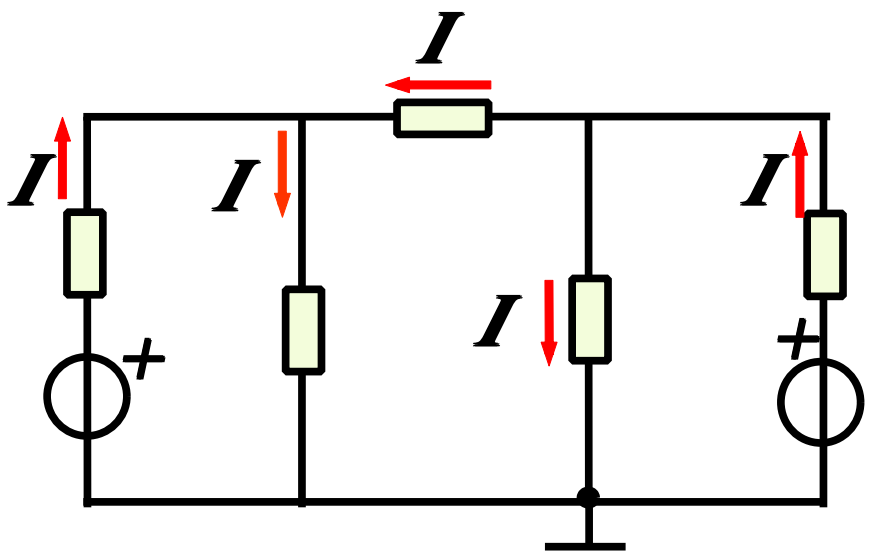

$$I \quad \frac{-V}{} \qquad I \quad \frac{V}{}$$

$$I \quad \frac{V-V}{} \qquad I \quad \frac{V}{}$$

$$I \quad \frac{-V}{}$$

$$\begin{cases} I & I & I \\ I & I & I \end{cases}$$

$$\begin{cases} V & V & & V \\ & V & V & V \end{cases}$$

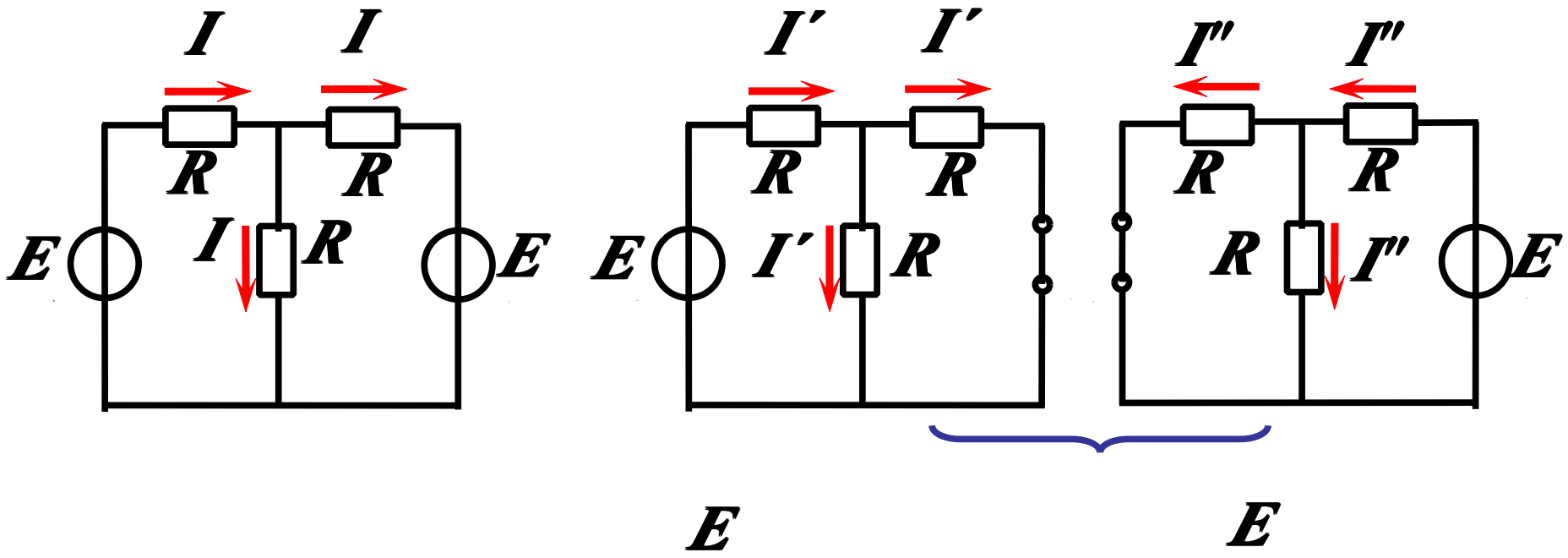
I
I
R
R
E
I
R
E
I′
I′
R
R
E
I′
R
I″
I″
R
R
R
I″
E
E
E

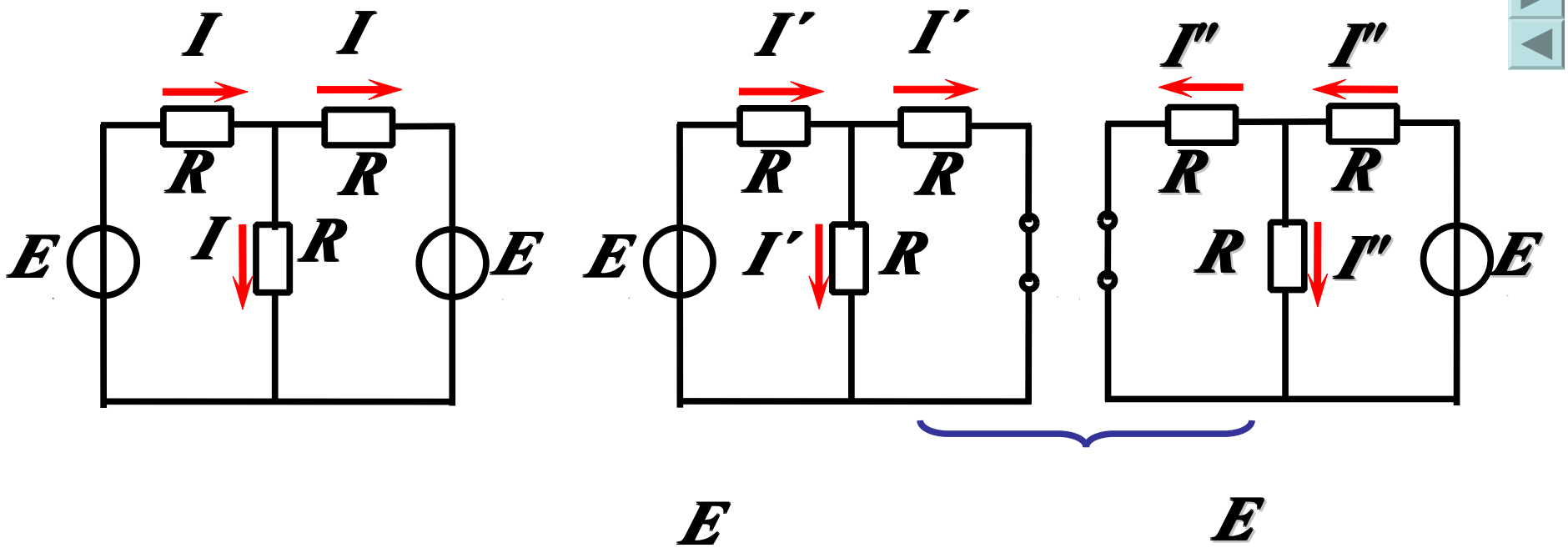

$$I' = \frac{E}{R + R \,//\, R} = \frac{R + R}{RR + RR + RR} E$$

$$I = \frac{R}{R + R} \cdot \frac{E}{R + R \,//\, R} = \frac{R}{RR + RR + RR} E$$

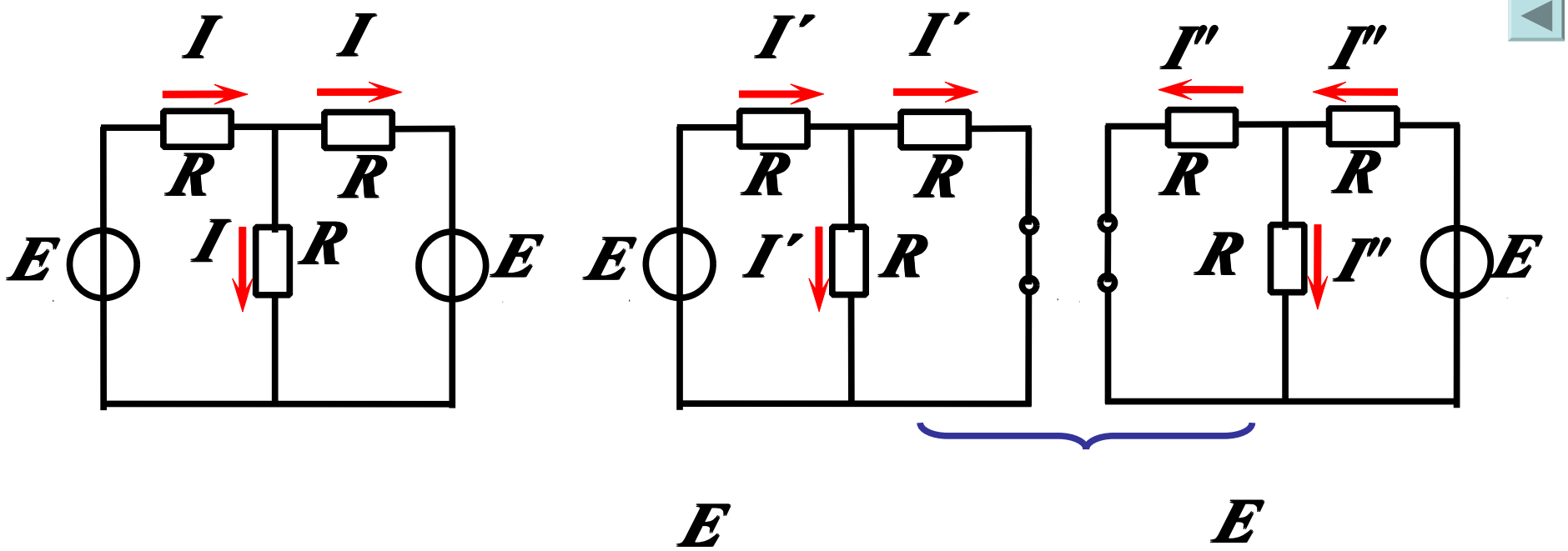
I
I
R
R
E
I
R
E
I′
I′
R
R
E
I′
R
I″
I″
R
R
R
I″
E
E
E

P

$P \quad I\,R \qquad I + I \quad R \qquad I\,R + I \quad R$

$E \qquad\qquad\qquad\qquad\qquad\qquad I$

$E = \quad I \quad R = \quad R = R =$

$R \quad I \quad I \quad U$

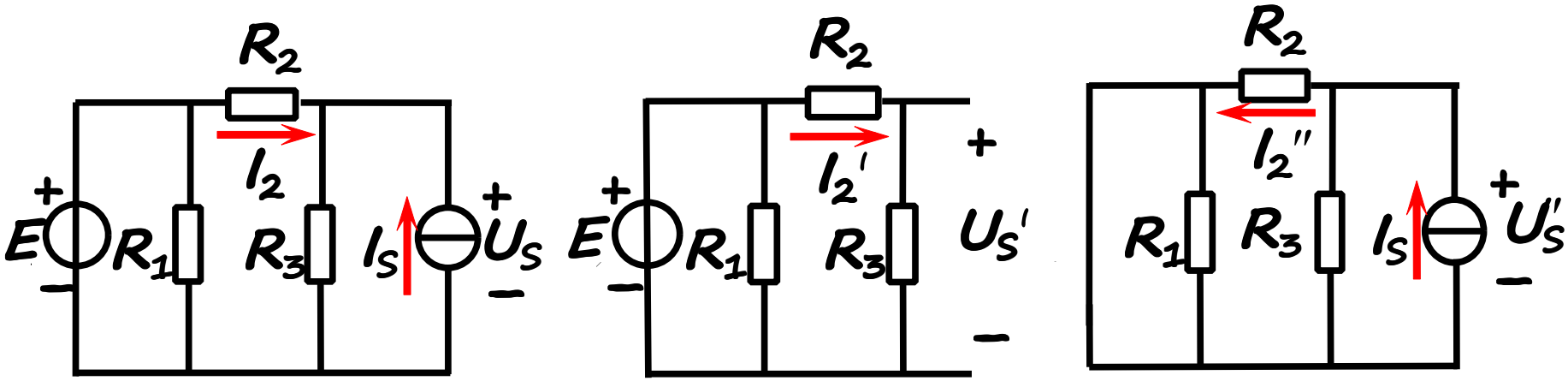

(a)

$E \quad I \quad I \quad E$

$$I \quad \frac{E}{R + R} \quad \frac{\quad}{+}$$

$$U \quad I\,R$$

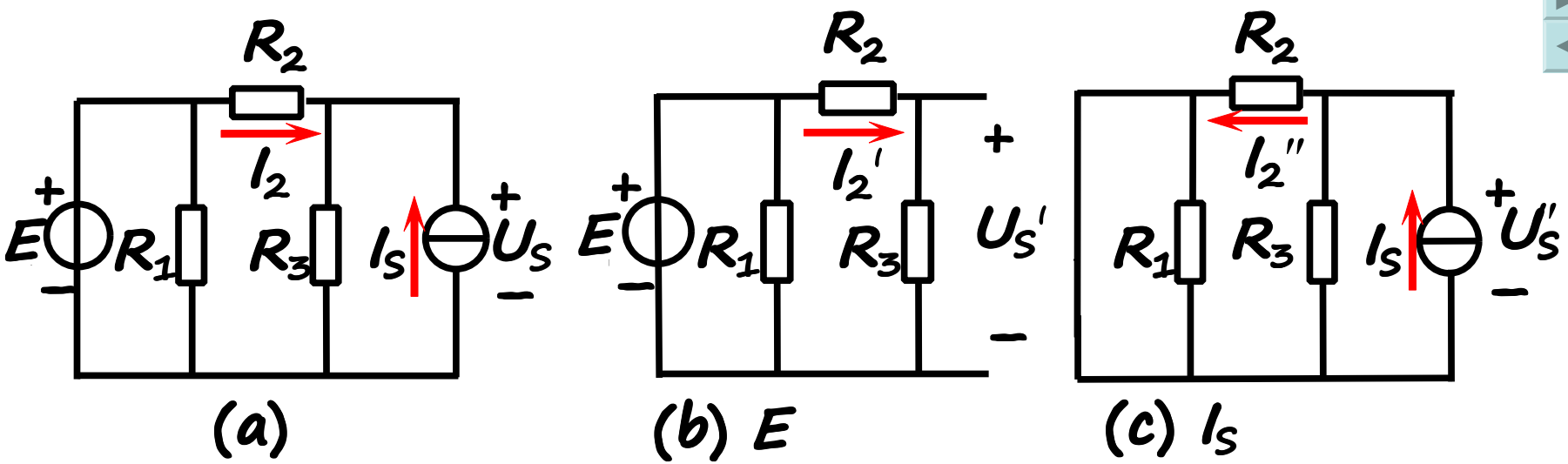

$$I \quad \frac{R}{R + R} I \quad \frac{\quad}{+}$$

$$'' = \quad '' \quad = \quad \times \quad =$$

$$I \quad I - I \quad -$$

$$U \quad U + U \quad +$$

k

k

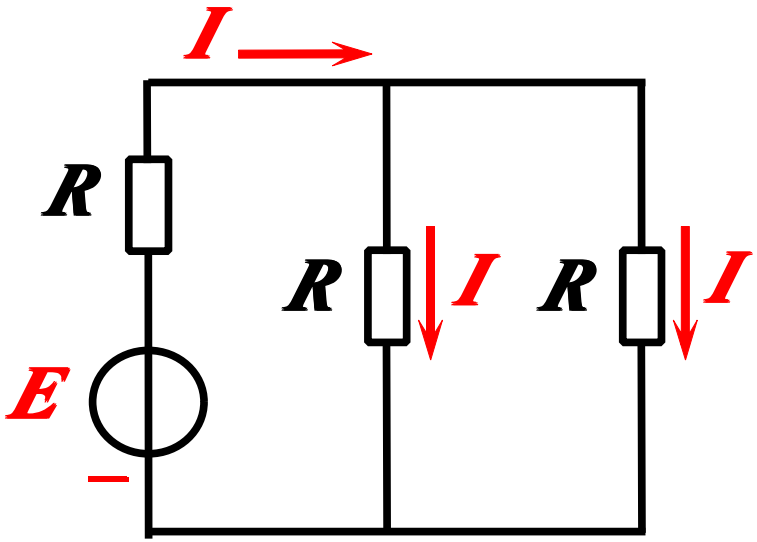

E n n

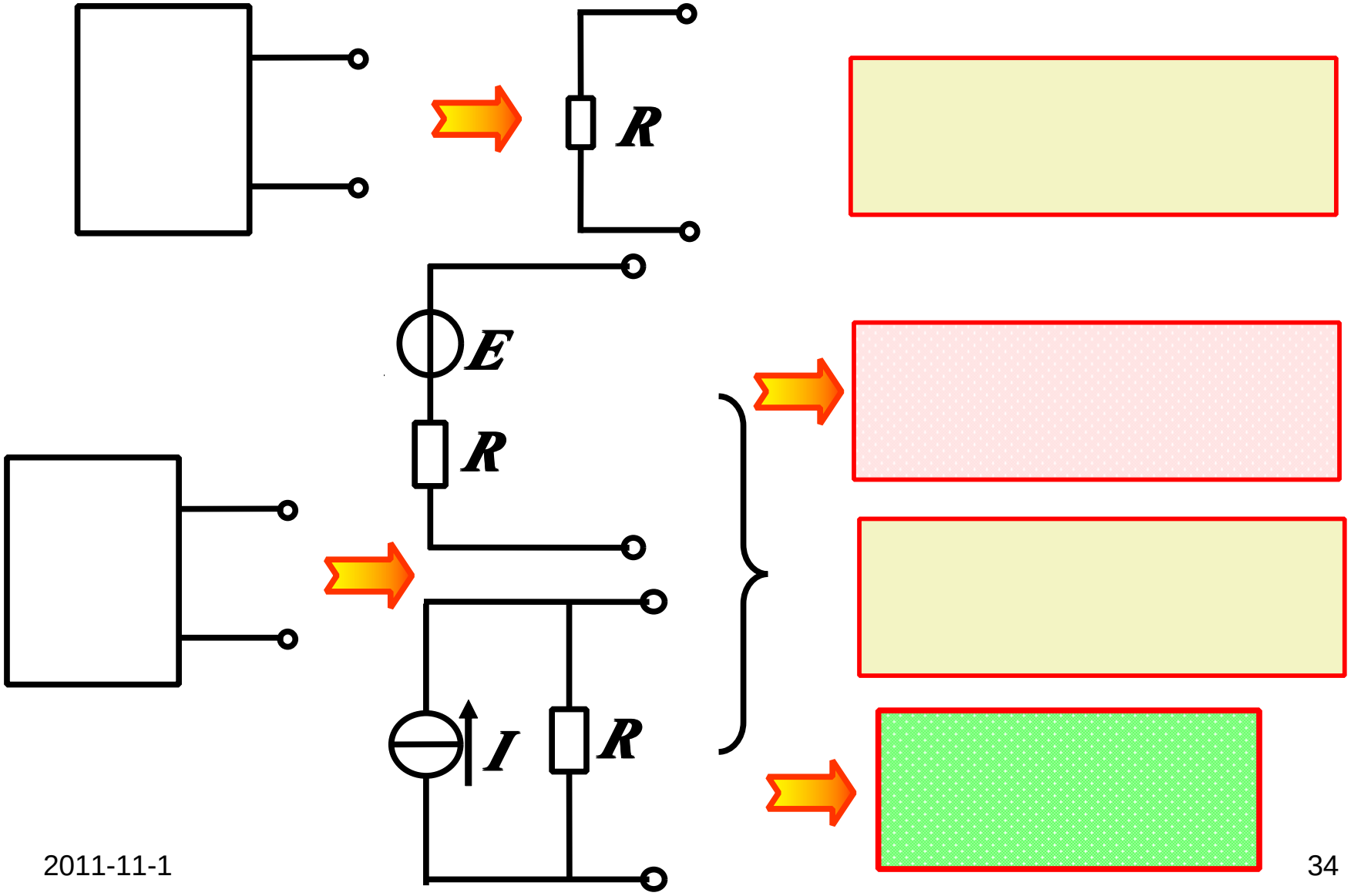
R
E
R
I
R

E R

E

U

R

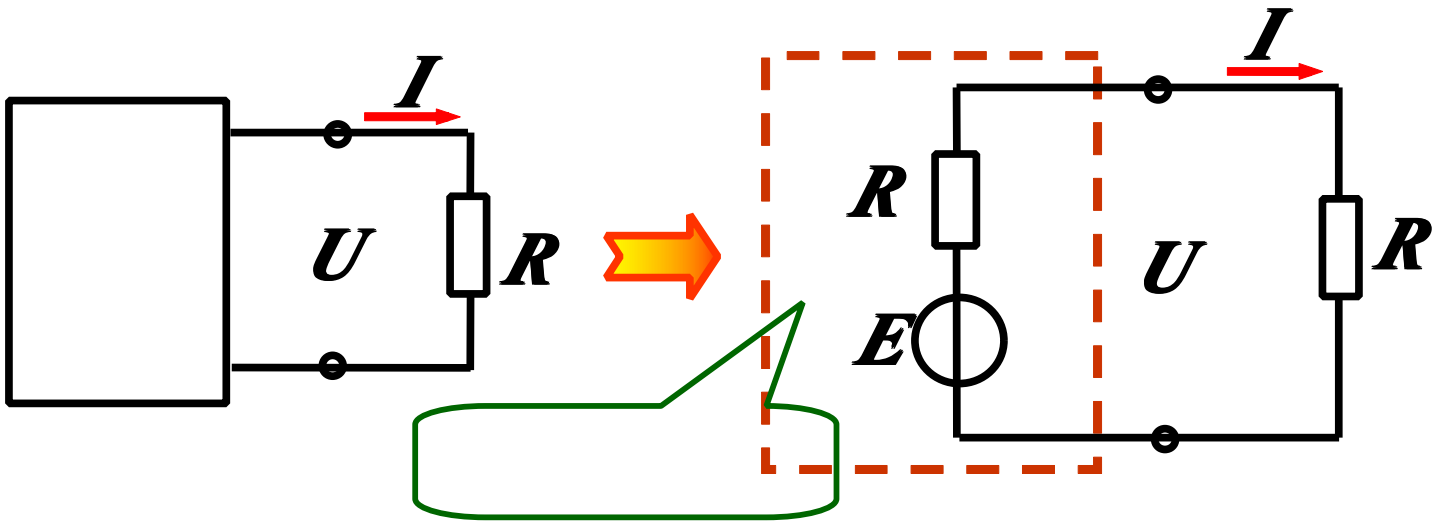

E E R R

R I

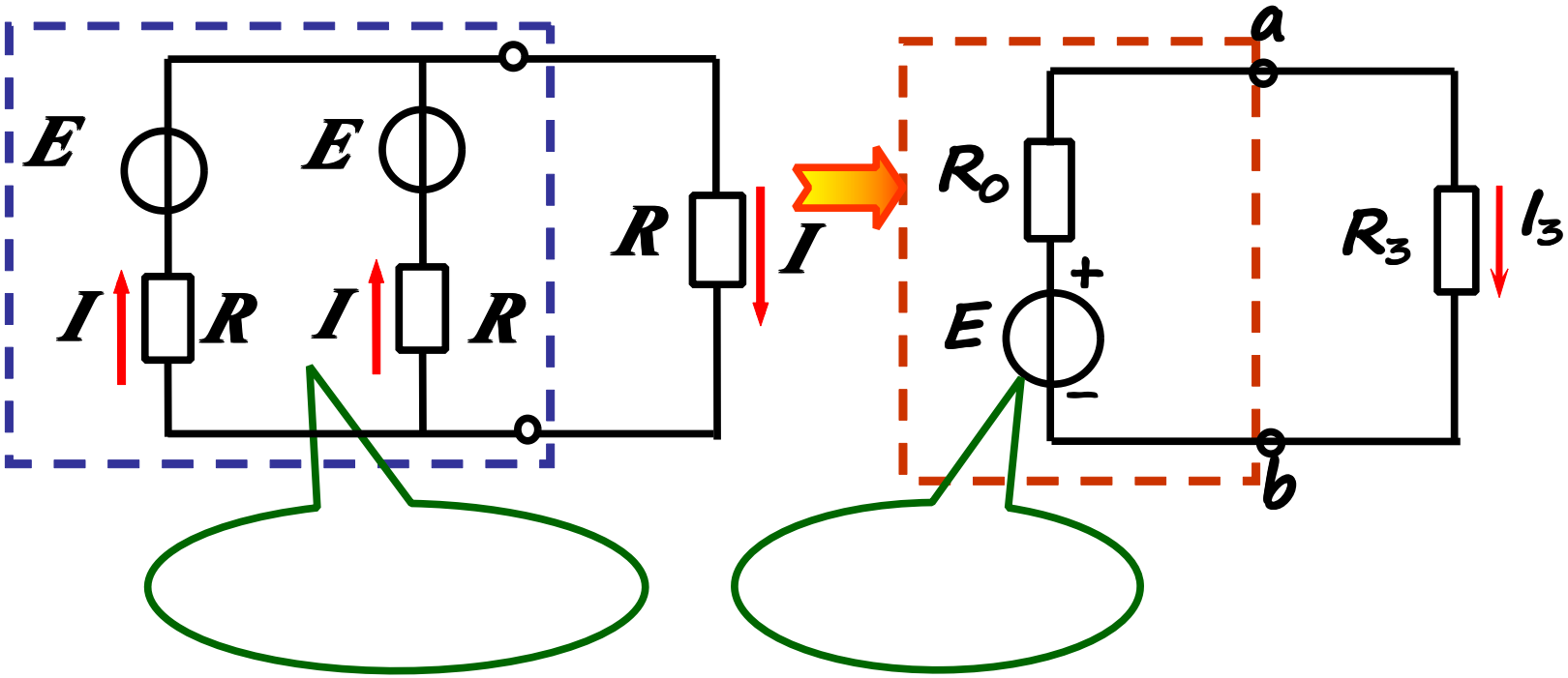

E E R R

R I

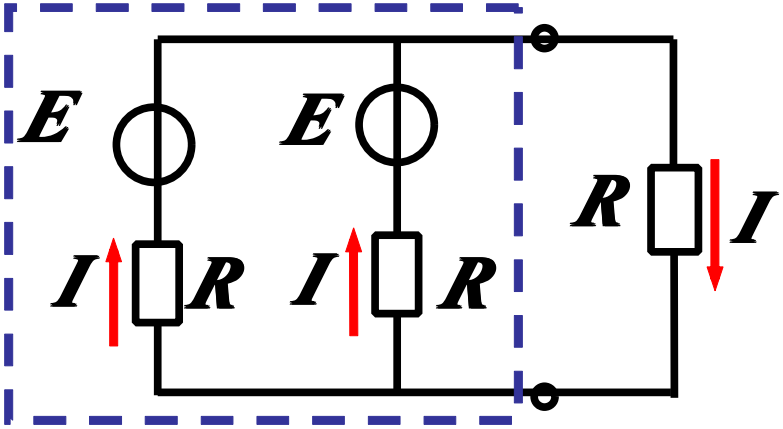

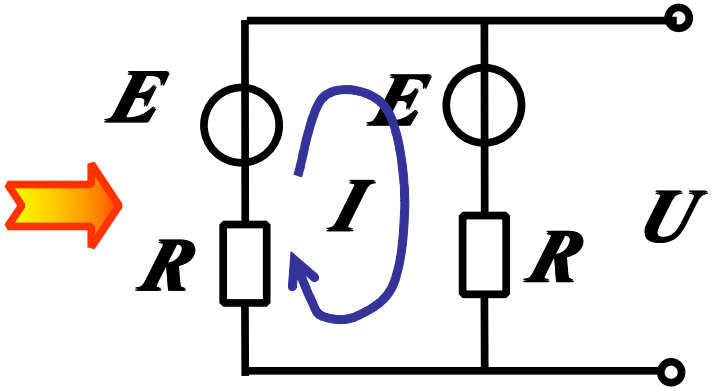

E

$$I \quad \frac{E - E}{R + R} \quad \frac{-}{+}$$

$$E \quad U \quad E + IR$$

$$E \quad U \quad E - IR$$

E

E E R R

R I

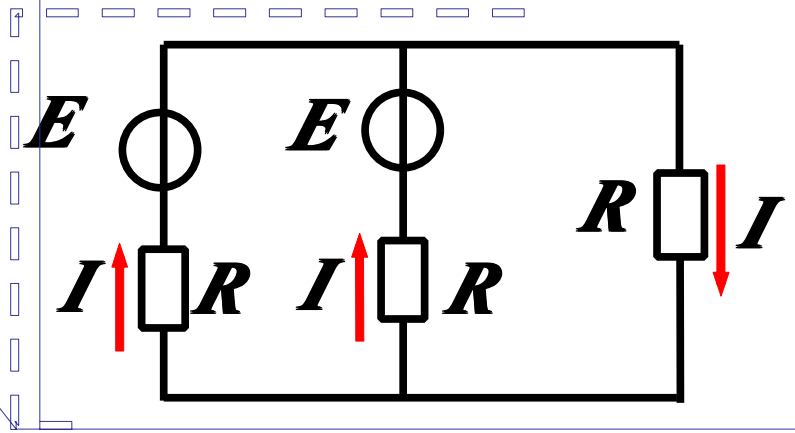

R

E E R R

R I

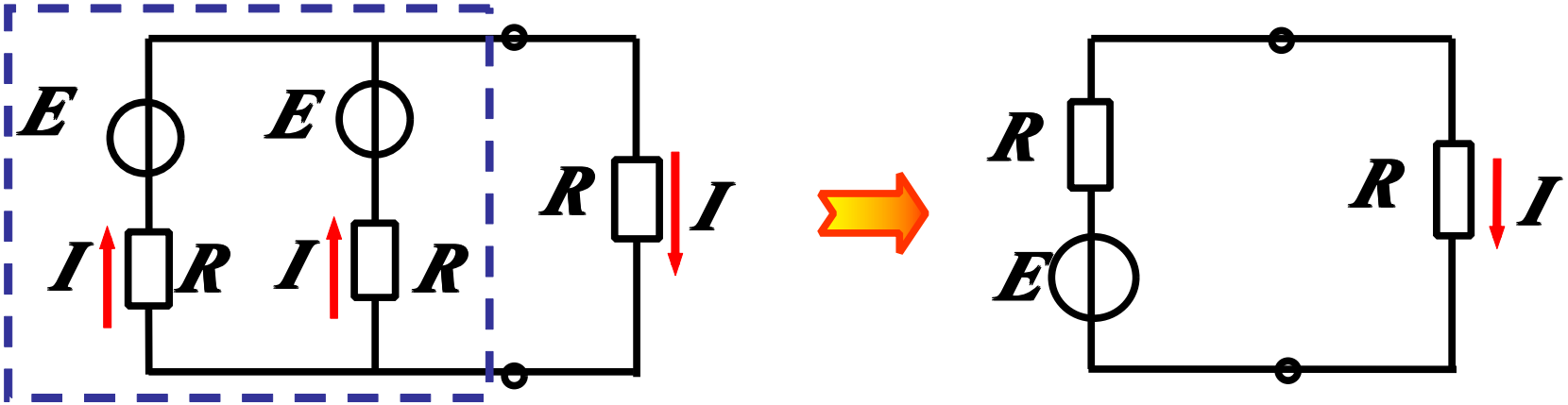

I

$$I \quad \frac{E}{R+R} \quad \frac{\quad}{+}$$

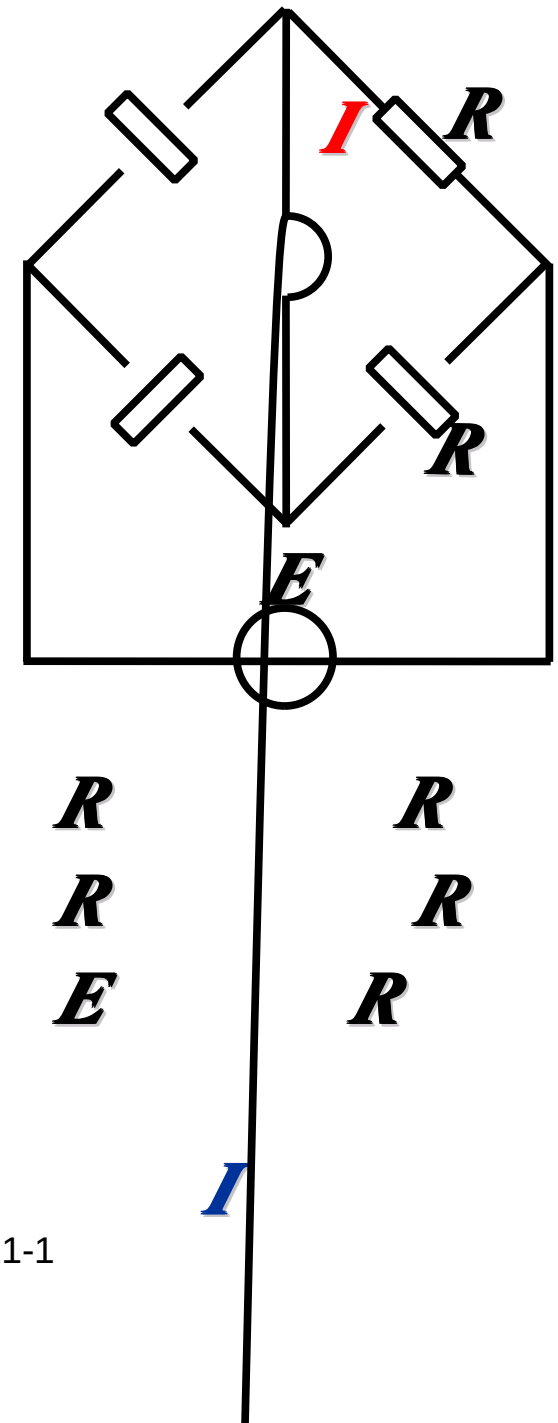
I
R
R
E
R
R
R
R
E
R
I

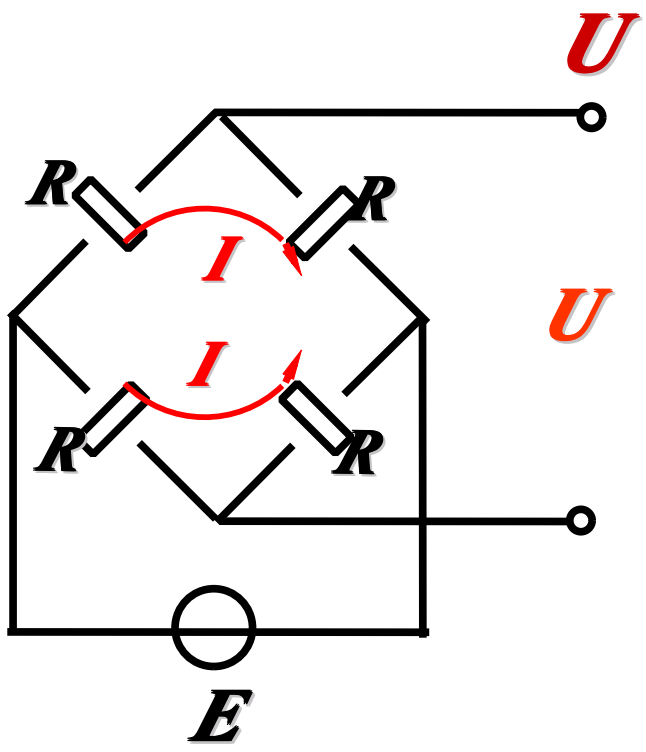

$$I \quad \frac{E}{R+R} \quad \frac{\quad}{+}$$

$$I \quad \frac{E}{R+R} \quad \frac{\quad}{+}$$

$$E' \quad U \quad I\,R \;-I\,R$$

$$E' \quad U \quad I\,R \;-I\,R$$

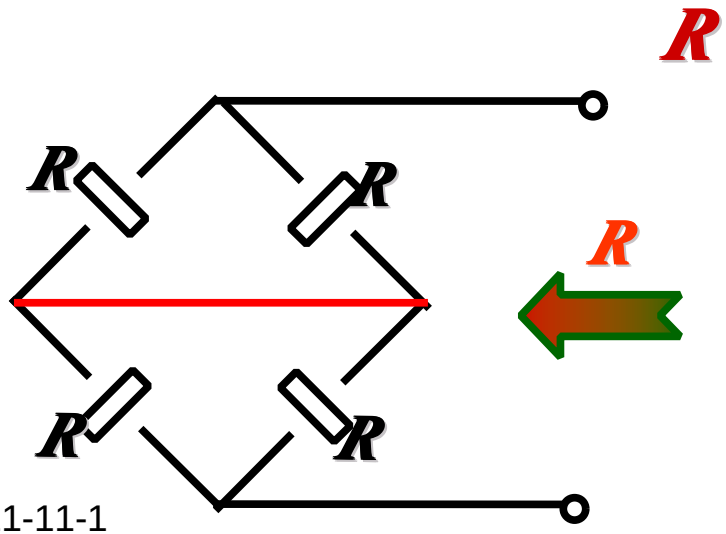

$$R \quad R$$

$$R \quad R$$

$$R \quad \frac{R \quad R}{R+R} + \frac{R \quad R}{R+R}$$

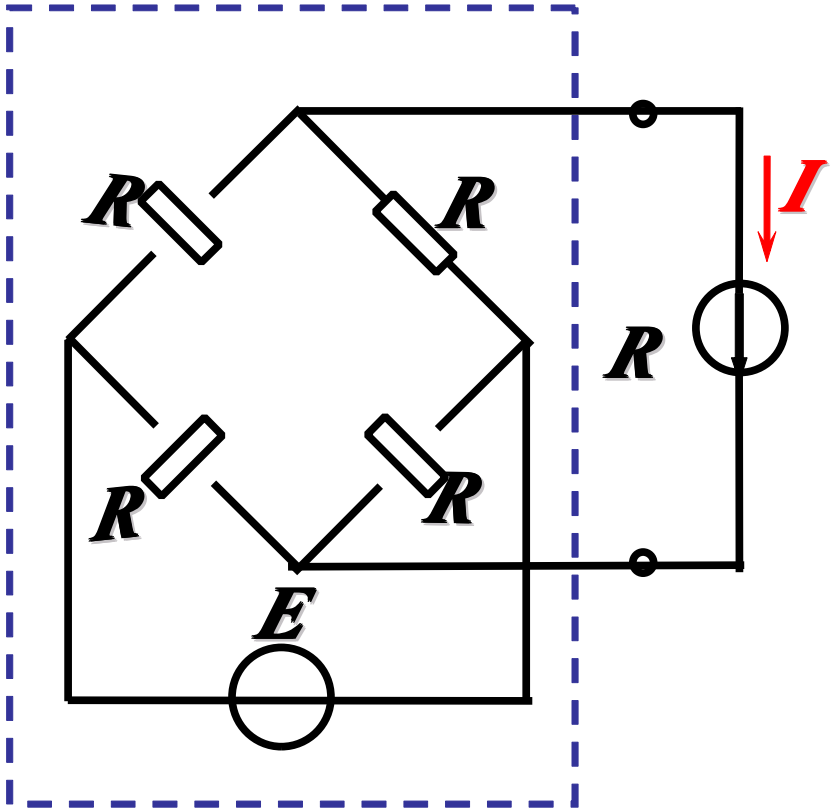

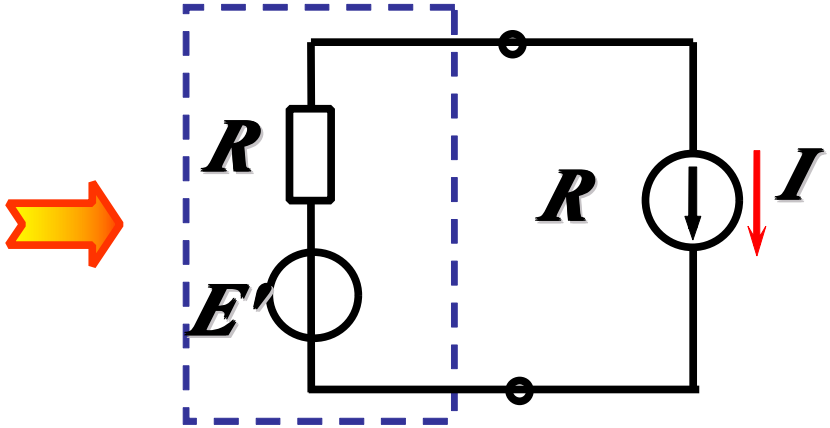

I

$$I \quad \frac{E}{R+R} \quad \frac{\qquad}{+}$$

I

$R \quad R \quad R$

$R \quad R \quad E$

$E \quad I$

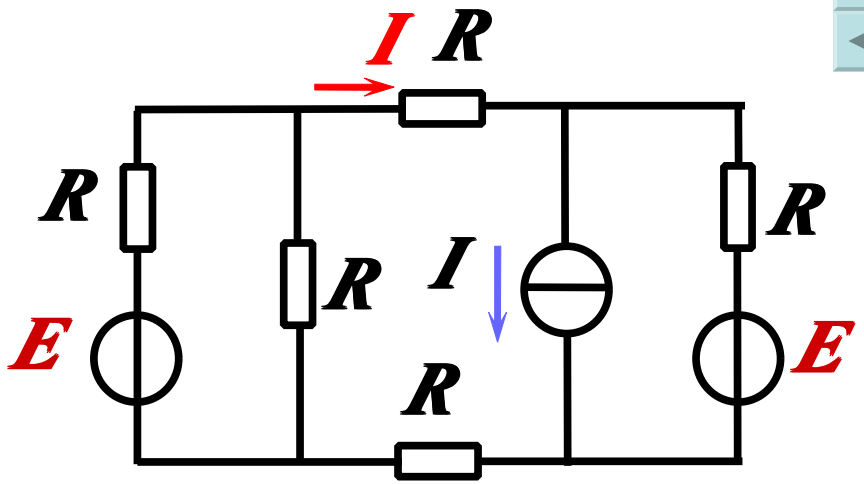

U

$$I \quad \frac{E}{R \quad R}$$

$U \quad IR \quad E \quad IR$

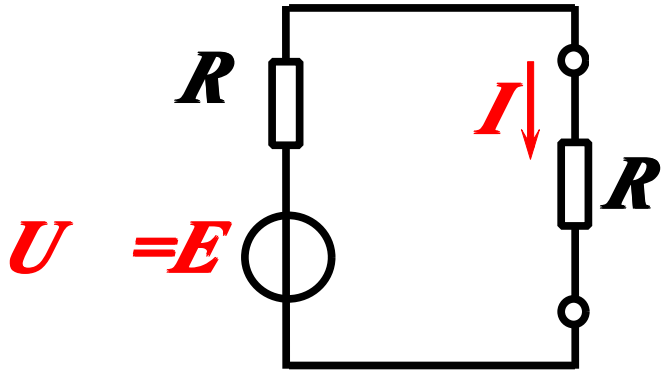

R

$R = R \quad R \quad R \quad R$

$I \quad I = \frac{E}{R \quad R} =$

R_x

I

R_x

U

U U U

R

R

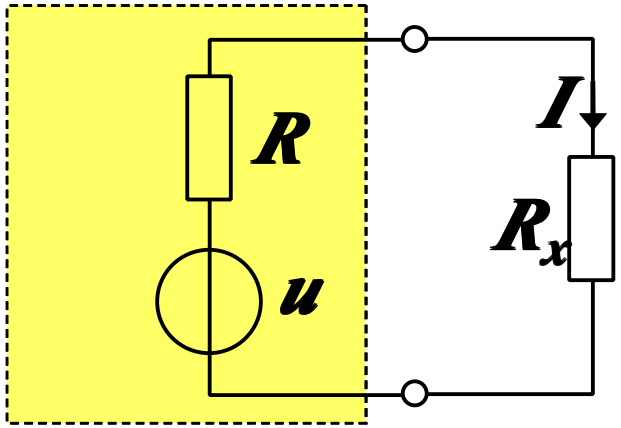

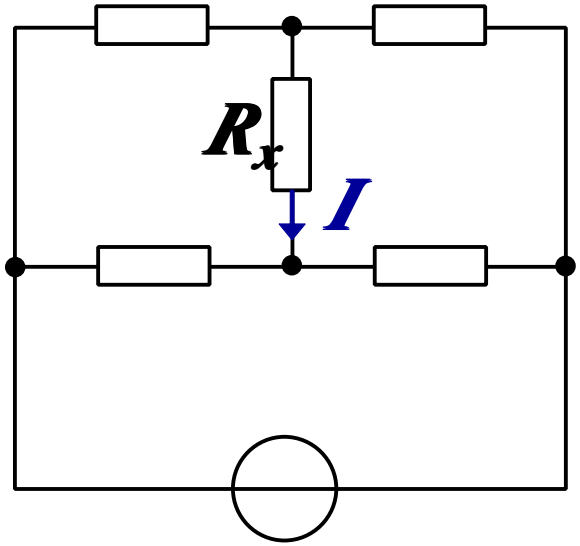

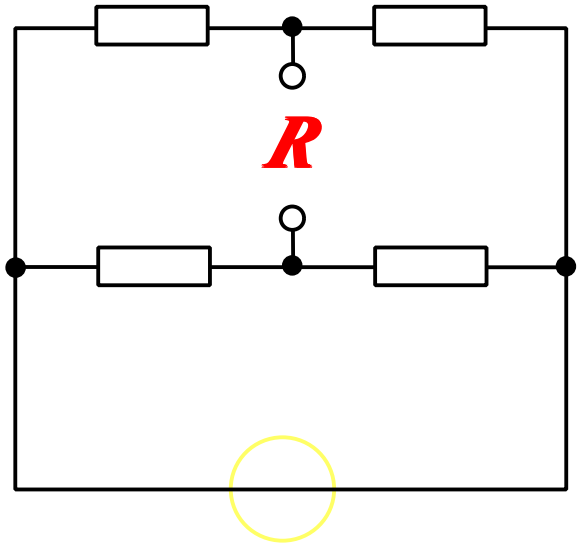

R_x

I

R_x

$$I \quad \frac{U}{R \quad R_x} \quad _____$$

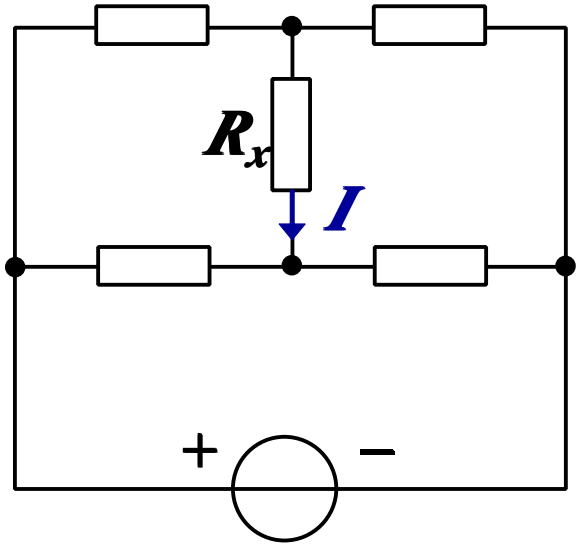

R_x

$$I \quad \frac{U}{R \quad R_x} \quad _____$$

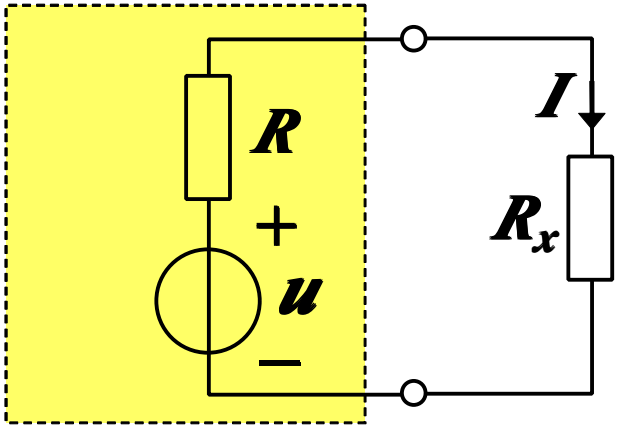

I_S

R

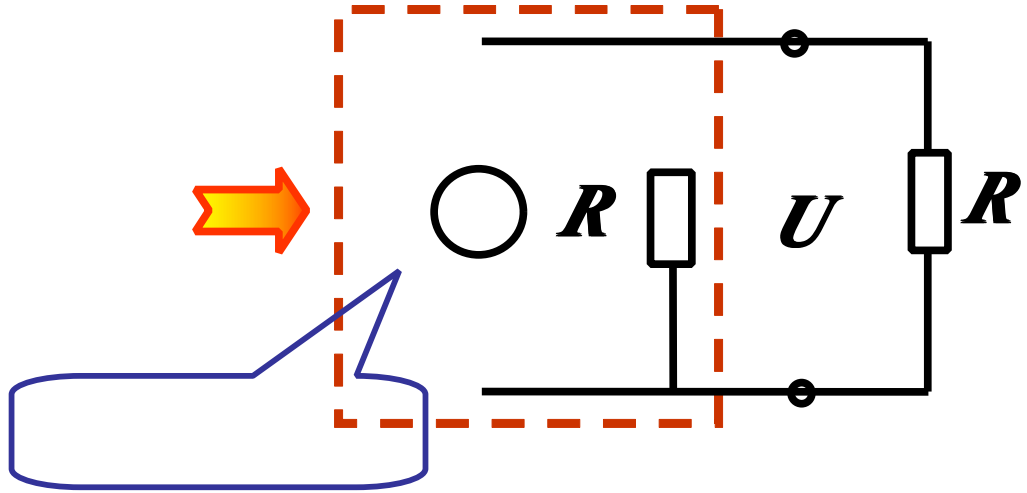

I_S

R

R R

R R

E R

I

I

E R R

R I R R R

R R R R R

$$\left| R \quad I \quad R \right|$$

$$I \quad \frac{E}{R} \quad \text{—}$$

$$I \quad \frac{\frac{E}{R}}{R+R} \quad I \quad \frac{}{+} \quad .$$

.

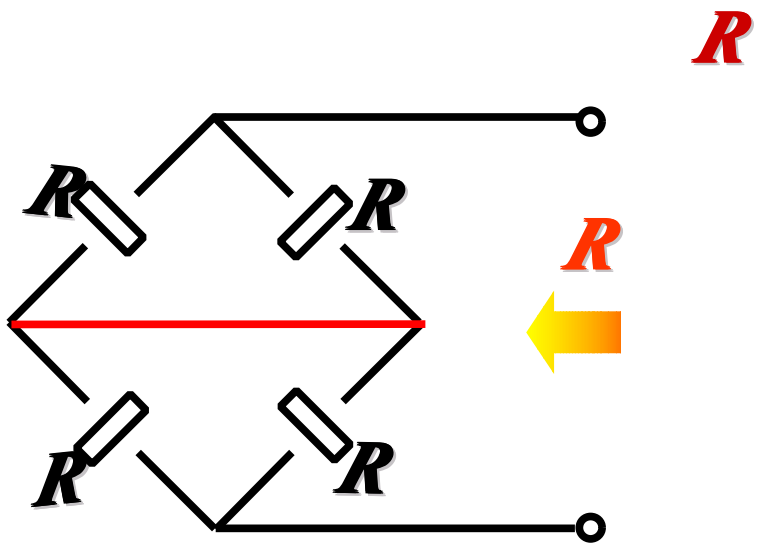
R
R
R
R
R
R

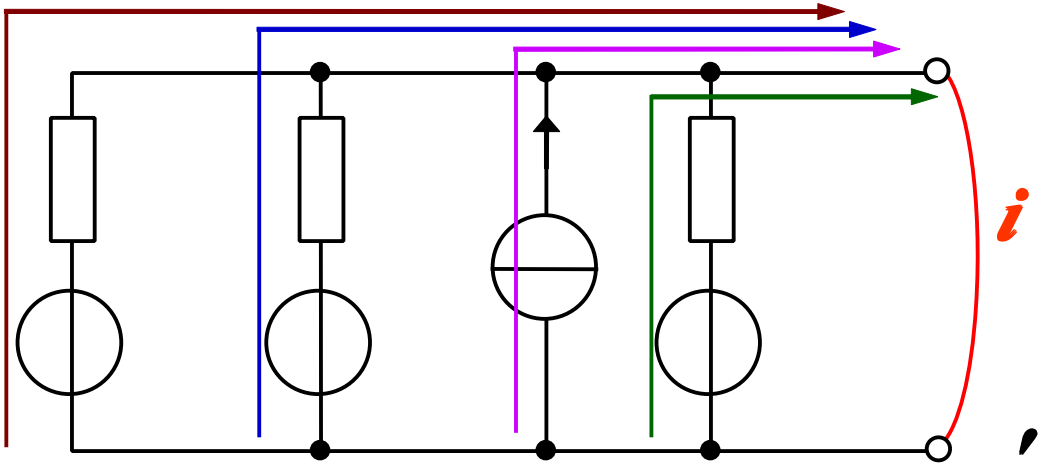
i

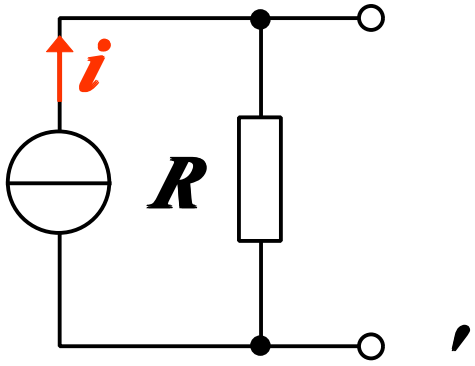
i
R

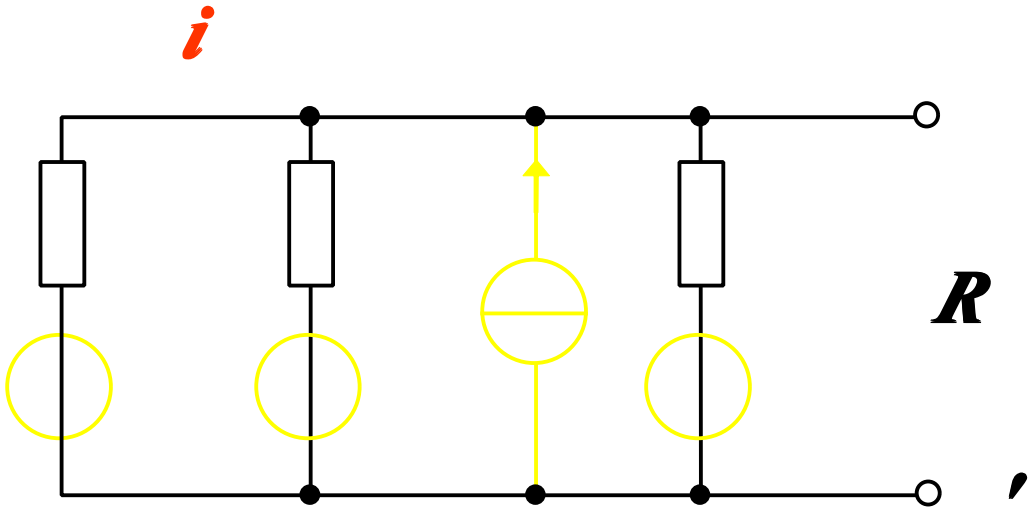
i
R

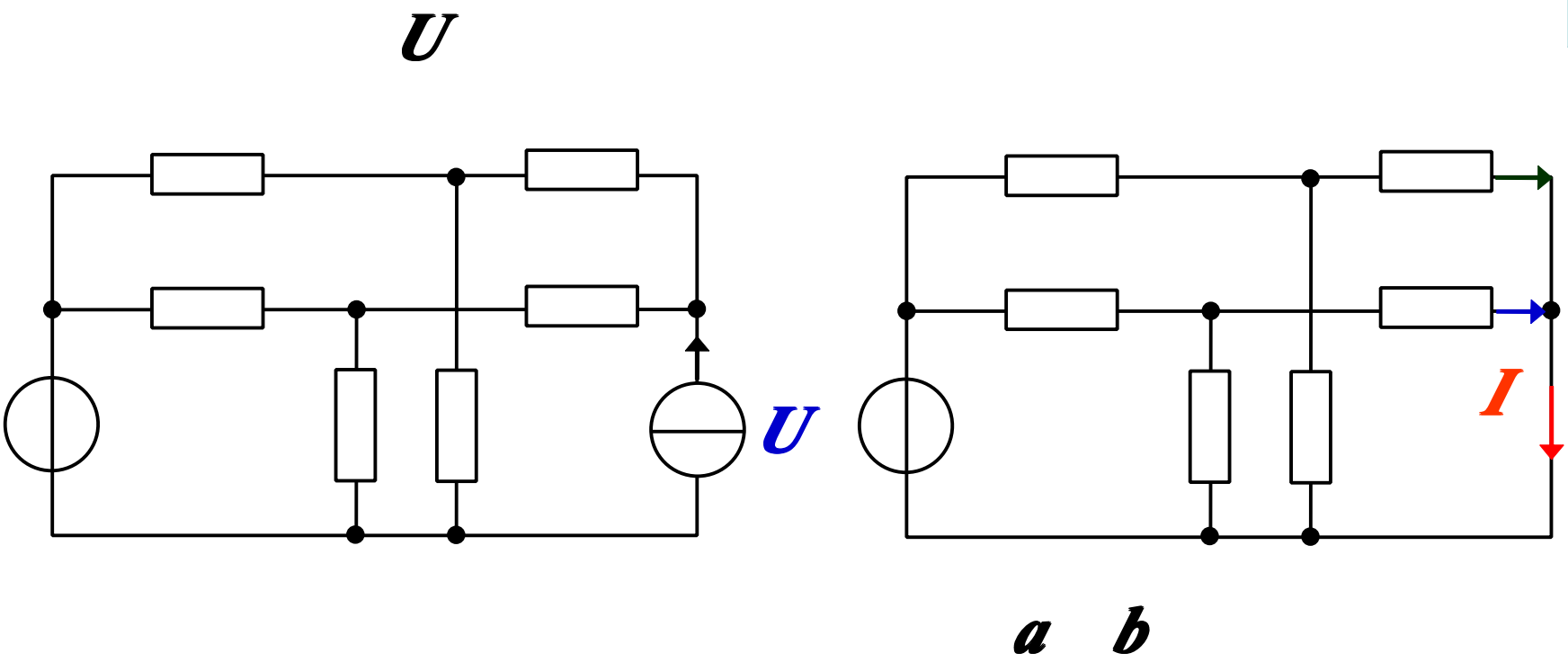

I

I

R

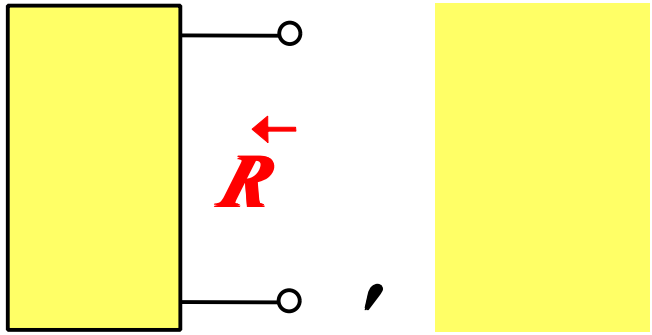
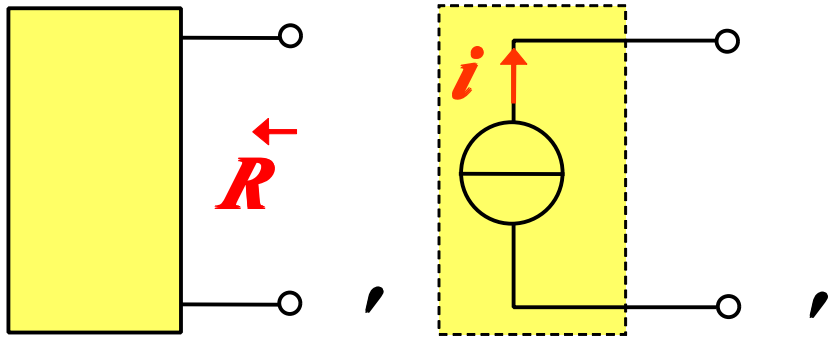
R