2018 8

1

2

1

E_s U_K R_s

R

2 I_s I_d

1

1 1 R U_{AB} I_R 1 R

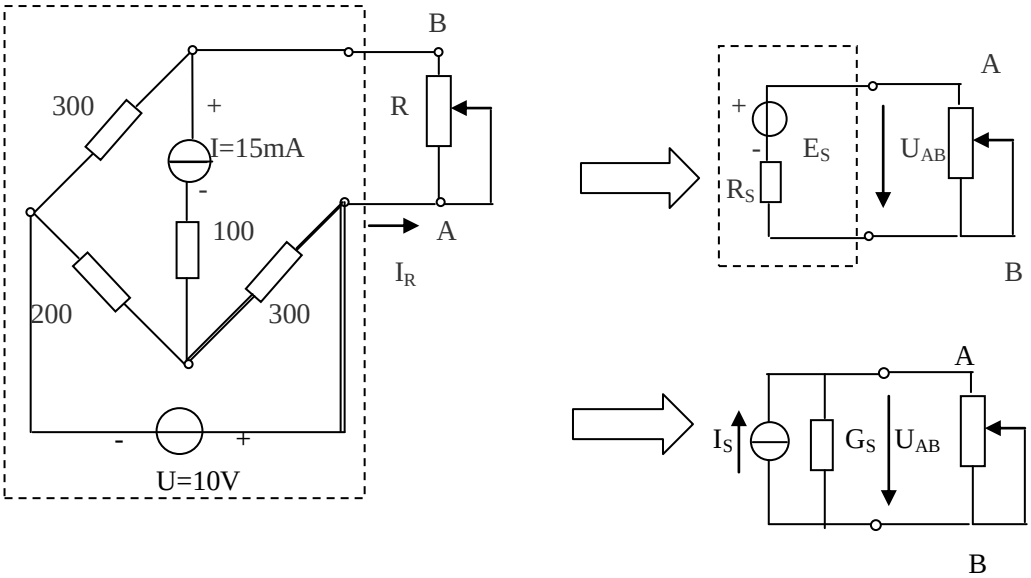

1

1

	0	100	300	
I				

2

AB R_{AB}

3 R_{AB} U_K 1

R_{AB} b U_{AB} I_R 2 1

2

	0	100	300	
I				

4

1 R R_S

1 3 1

3

1

2

3

A L S

I_c I_c

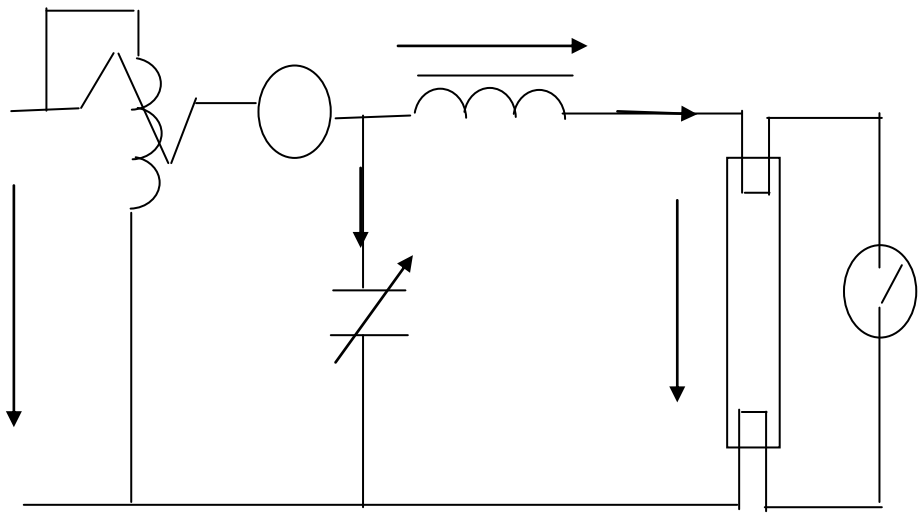

	U V	U_L V	U_A V	I mA	I_C (mA)	I_G (mA	P W	COS
0								
1								
2								
4								
6								

I=f C COS =f c

$\sqrt{3}$

$\sqrt{3}$

$\sqrt{3}$

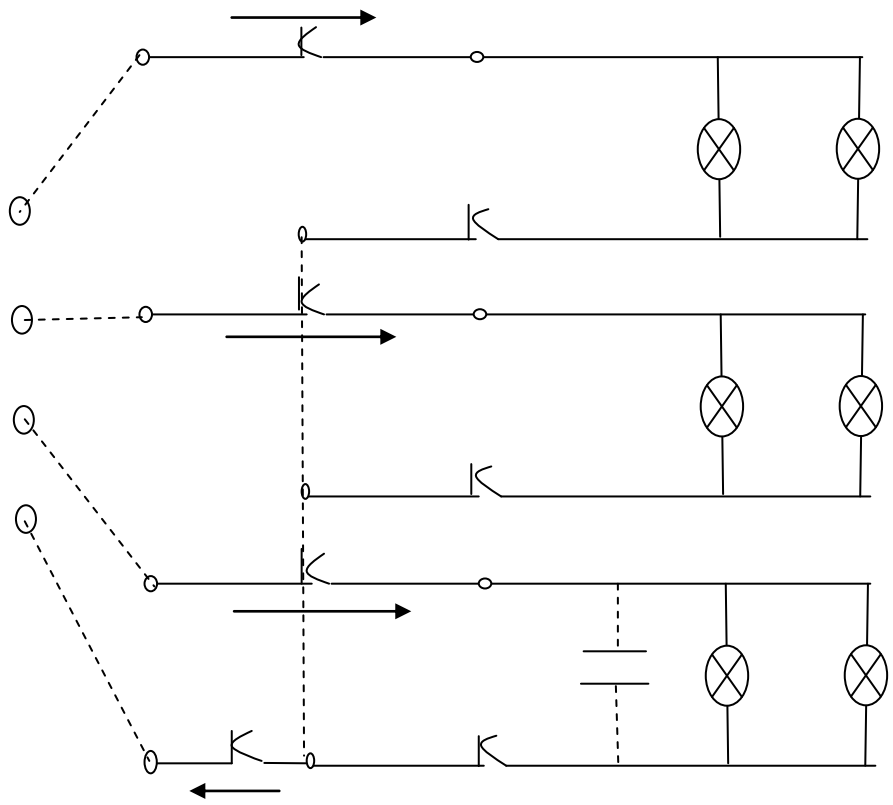

$\sqrt{3}$ $\sqrt{3}$

1 RC RC

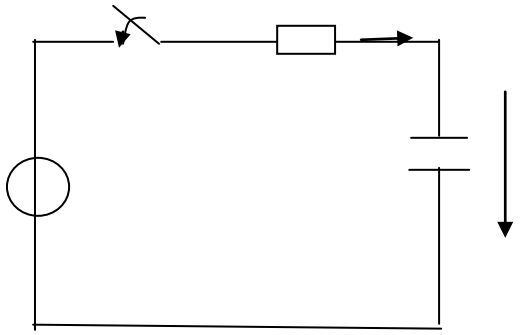

$\frac{U_S}{R} e^{-\frac{t}{\tau}}$ $-\frac{t}{\tau}$

=RC .

2 :

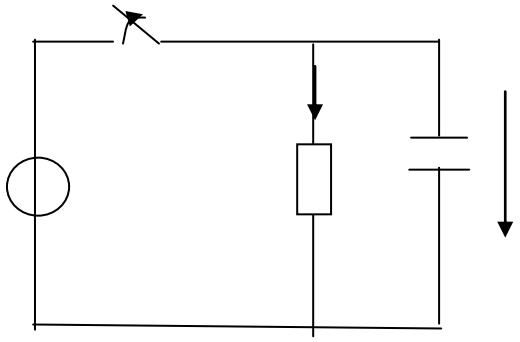

i= $\frac{U_S}{R} e^{-\frac{t}{\tau}}$ $-\frac{t}{\tau}$

, , ,

, . (10),

, i(t) $u_C(t)$.

:

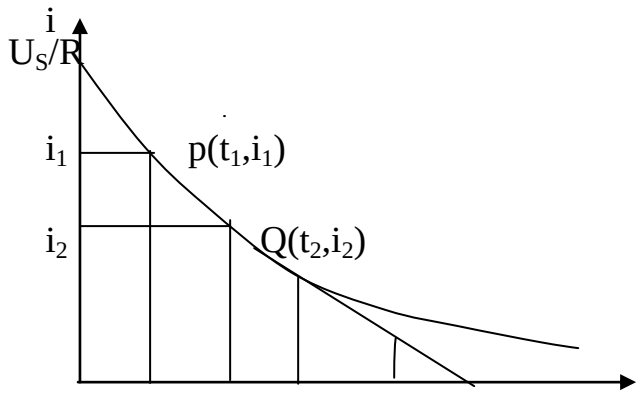

(t_1,i_1) (t_2,i_2), :

$$I = \frac{U_S}{R} e^{-\frac{t}{\tau}}$$

$$= \frac{t_2 - t_1}{I_n(i_1 / i_2)}$$

2. D, $\overline{DF}$ $\overline{DE}$,

$$\overline{DF} = \frac{\overline{DE}}{tg\alpha} = \frac{i}{(-di/dt)} = \frac{i}{i(\frac{1}{\tau})} =$$

3. , i $I_0=U_S/R$ 36.8% .

t i I_0 :

t	1	2	3	4	5	.	
i	$0.368I_0$	$0.135I_0$	$0.050\ I_0$	$0.018\ I_0$	$0.007\ I_0$	.	0

1 RC 4

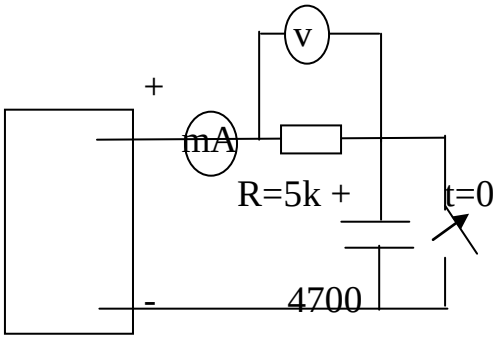

4

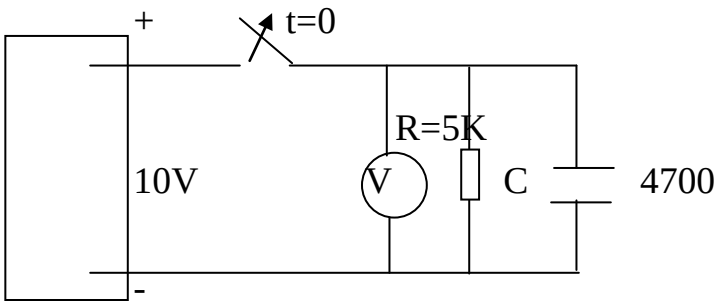

5

C 4700 F/50V C= /R

-5% +10%

u_C= f t i_C=f t

1 K

2 U 10V

3 K u_R t=0

5

K K u_R=3.68V t , t=

: U= V

t								
U_R								
U_C								
I_C								

U_R=3.68 :t=

(2) RC

5

i_C=f(t) u_C=f(t)

1. K, U=10V.

2. K , u_c t=0

5 .

t								
U_C								
I_C								

U_C=3.68 :t=

1 RC

2 i_C=f(t) u_C=f(t)

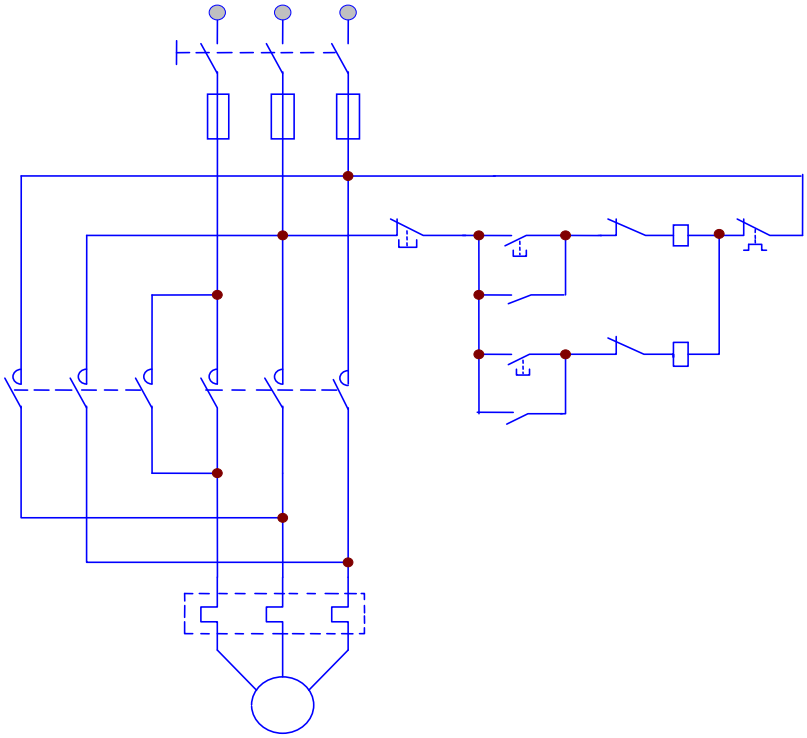

1

Q_1

SB_1 KM_1 M KM_1

SB_1 SB_3

FU FR